THREE ESSAYS ON THE EFFECTS OF APPRAISAL, CULTURAL, EMOTIONAL, AND COGNITIVE FACTORS ON INFORMATION TECHNOLOGIES ACCEPTANCE AND USE

by

Chun-Lung Huang

A Dissertation Submitted in

Partial fulfillment of the

Requirements for the Degree of

Doctor of Philosophy

in Management Science

at

The University of Wisconsin–Milwaukee

May 2016

ABSTRACT

THREE ESSAYS ON THE EFFECTS OF APPRAISAL, CULTURAL, EMOTIONAL, AND COGNITIVE FACTORS ON INFORMATION TECHNOLOGIES ACCEPTANCE AND USE

by

Chun-Lung Huang

The University of Wisconsin-Milwaukee, 2016
Under the Supervision of Professor Mark Srite

Former Chairman of the Federal Reserve of the United States from 1987 to 2006, Alan Greenspan in his book, "The Map and the Territory: Risk, Human Nature, and the Future of Forecasting", wrote that conscious or not, we make wagers of our future, virtually every day and the fear of future may have driven us to making decisions and behaviors out of our rational control (2013). He suggested that the emotion of fear impels unpredicted behaviors. The question is how do we, as behavioral researchers, predict or explain human behaviors, when there is a factor (emotion) interfering with our logical self and contributing to our unpredictable behaviors. Specifically, how do we, technology use researchers, predict or explain a user's behavior when a person's emotion is involved? We surmise that the answer may result in "what do you care?". When asked, we, as an intelligent being, ponder the consequences, and in the process, we calculate all the pluses and minuses in mind before formulating an intention or making a decision on what to do or not to do. What do we care is a combination of cognitive and emotional responses and evaluations. Gross (2002) stated that "emotions arise when something important to us is at stake" (p. 281). In reality, we pride ourselves on the ability of thinking; nevertheless, we often act on our emotions. For instance, homebuyers often make their buying decision based on

their likings (emotions) on the biggest purchase of their lives. Emotion is one of the decisive causes of a human's precursor before behaviors. Like the first question, what we care, or what we consider to be important, activates our emotions and other considerations (cognition) and together they influence how we respond to our perceptions and behavioral intentions.

In essay 1, we propose a model, which utilized Lazarus and Folkman's Cognitive Appraisal Theory of Emotion or Appraisal Theory (1984, 1987) as a structural foundation to lay out the nomological relationships among a person's personal, cognitive, and emotional factors in predicting technology use behaviors. Emotion, likes many social and psychological factors, is challenging to give a full-consensus definition, and has been treated as a polar counterpart of cognition. Lazarus and Folkman's Appraisal Theory suggested that when a person is facing a (disruptive) event, he or she appraises the possible outcomes (we suppose that appraising is a form of cognitive process), and based on the appraisal and along with other cognitive responses, together they influence his or her emotions. Both cognitive and emotional responses impact his or her behavioral intentions and behaviors. Derived from Appraisal Theory, various emotion theories and models, and TAM, we built a research model, which would provide and prove and the interplayed relationships among external, cognitive, and emotional variables. This study tested our research model in the context of four different technologies (Microsoft Access, iPad, SAP, and smartphone). The findings will provide substantial evidence of the imperative impact of emotions on technology use research and practices.

In essay 2, built on the previous research model and supported by the theoretical background from essay 1, we would like to see how culture impacts on this model. Research has shown that people from different cultures do not think or behave alike. A person's behavioral intentions and behaviors are often derived from his/her belief system. Lazarus and Folkman

(1984) stated that “beliefs are personally formed or culturally shared cognitive configurations” (p. 63). They implied that the differences in culture may cause the variances while using a behavioral model (e.g. TAM) to predict or explain behaviors. In Lazarus and Folkman’s Appraisal Theory (1984, 1987), they regarded that beliefs determine what fact is, that is, “how things are” in the environment, and how they shape the understanding of its meaning” (Lazarus and Folkman, 1984, p. 63). In other words, they believed that culture and personal factors shape a person’s understanding of his/her surrounding environment. Bem (1970) distinguishes two levels of beliefs, primitive and higher-order. Primitive beliefs reside in a subconscious state within a person; when those beliefs are needed, they will emerge under specific circumstances. “Higher-order beliefs are learned” (Lazarus and Folkman 1984, p. 64) from experiences and over time become personal primitive beliefs. Often beliefs are operating underneath a person’s explicit awareness; nevertheless, beliefs could shape a person’s perceptions. We added cultural constructs to the proposed model, which were derived from Hofstede’s four cultural dimensions (individualism/collectivism, power distance, uncertainty avoidance, and masculinity/femininity), to examine the effect of cross cultural differences. In addition, the added constructs should demonstrate notable influences on a person’s cognition and emotion, and ultimately his/her technology use.

In essay 3, uncertainty adversely impels one’s logical judgments, decisions, and behaviors (Baker, Bloom, Davis, 2015: Bloom, 2009; Denis and Kannan, 2013). Straube, Mentzel, and Miltner (2007) described anticipatory anxiety using “waiting for spiders” as a metaphor. Anticipatory anxiety was described that humans will estimate a possible future threat, danger, or other upcoming potentially negative events, which cause him/her anxiety (Barlow, 2000; Barlow, Chorpita, and Turovsky, 1996; Behnke and Sawyer, 2000). Research in user

technology acceptance and use should not ignore uncertainty's impact on a person's perception and behaviors. The present study is aimed at investigating how users would feel along with what they would think, and how they would act, given an ambiguous event when the office workers are given a new technology or information system to use in their workplace. We also explore another factor, anticipatory anxiety, which is induced by uncertainty. Together, we believe that uncertainty factors and anticipatory anxiety factor would be the antecedents on user's behavioral intention. The contribution of this study will shed light on discovering and solving knowledge in a user's predicament in using new enterprise software, and thus enhance a better understanding for professionals when implementing it.

© Copyright by Chun-Lung Huang, 2016
All Rights Reserved

To my parents

TABLE OF CONTENTS

ABSTRACT ii
LIST OF FIGURES xii
LIST OF TABLES xiii
I. CHAPTER 1: WHAT DO YOU CARE? EMOTIONAL AND COGNITIVE EFFECTS ON TECHNOLOGY USE 1
1.1 Introduction 1
1.2 Theoretical Background and Hypotheses Development 6
Cognition: Technology Acceptance Model (TAM) 8
Emotion 19
Cognitive Appraisal Theory of Emotion (Appraisal Theory) 25
Commitment and Control 29
Social Norms 32
1.3 Research Methodology 35
Data Collection 35
Instrument Development 35
1.4 Data Analysis 36
Reliability and Validity Assessments: Study 1 (Microsoft Office – Access) 37
Model Testing: Study 1 (Microsoft Office – Access) 40
Reliability and Validity Assessments: Study 2 (iPad) 43
Model Testing: Study 2 (iPad) 46
Reliability and Validity Assessments: Study 3 (SAP) 48
Model Testing: Study 3 (SAP) 51
Reliability and Validity Assessments: Study 4 (smartphone) 53
Model Testing: Study 4 (smartphone) 56
1.5 Discussion and Implications 58
Discussion 58
Implications for Research 61
Implications for Practice 61

1.6 Limitations and Future Directions 62
Limitations 62
Future Directions 64
II. CHAPTER 2: CULTURAL, EMOTIONAL, AND COGNITIVE EFFECTS ON TECHNOLOGY USE 65
2.1 Introduction 65
2.2 Theoretic Background and Hypotheses Development 67
Culture 67
Hofstede's Four Dimensions of Culture 70
Uncertainty Avoidance 72
Collectivism/Individualism 74
Femininity/Masculinity 75
Power Distance 77
Technology Acceptance Model (TAM) 78
Commitment and Control 80
Social Norms 83
2.3 Research Methodology 87
Data Collection and Instrument Development 87
2.4 Data Analysis 87
Reliability and Validity Assessments: 88
Model Testing 94
Model 2 96
Reliability and Validity Assessments: 96
Model 2 Testing 102
2.5 Implication and Conclusion 104
Discussion 104
Implications for Research 105
Implications for Practice 105
2.6 Limitations and Future Directions 106

Limitations 106
Future Directions 107
III. CHAPTER 3: COGNITION UNCERTAINTY, EMOTION UNCERTAINTY, AND ANTICIPATORY ANXIETY ON TECHNOLOGY USE 109
3.1 Introduction 109
3.2 Theoretical background and Hypotheses Development 111
Technology Acceptance Model (TAM) 112
Uncertainty 114
Cognitive Uncertainty 115
Emotional Uncertainty 116
Appraisal Theory (Cognitive Appraisal Theory of Emotion) 117
Anticipatory Anxiety 118
Research Model 120
3.3 Research Methodology 121
Data Collection 121
Instrument Development 122
3.4 Data Analysis 122
Reliability and Validity Assessments 122
Model Testing 126
3.5 Discussions and Implications 129
Discussions 129
Implications for Research 130
Implications for Practice 131
3.6 Limitations and Future Directions 133
Limitations 133
Future Directions 134
IV. CONCLUSION 134
V. REFERENCES 139
VI. APPENDICES 166

Appendix 1 - Measures 166
Essay 1 & 2 Survey Items 166
Essay 3 – Survey Items 177
Appendix 2 – Construct Definitions 180
Essay 1 180
Essay 2 181
VII. CURRICULUM VITAE 182

LIST OF FIGURES

Figure 1: Technology Acceptance Model (TAM) by Davis, 1989 3
Figure 2: Technology Acceptance Model 2 (TAM2) by Venkatesh and Davis, 2000 10
Figure 3: Technology Acceptance Model 3 (TAM3) by Venkatesh and Bala, 2008 11
Figure 4: Unified Theory of Acceptance and Use of Technology (UTAUT) by Venkatesh, Morris, Davis, and Davis, 2003 12
Figure 5: Theory of Reasoned Action (TRA) by Fishbien and Ajzen 1975 15
Figure 6: Theory of Planned Behavior (TPB) by Ajzen 1985 and 1991 16
Figure 7: Research Model (Essay 1) 34
Figure 8: Research Model (Essay 2) 86
Figure 9: Path Coefficients and R^2 (Model 1) 93
Figure 10: Path Coefficients and R^2 (Model 2) 101
Figure 11: Research Model (Essay 3) 120
Figure 12: Path Coefficients and R^2 (Essay 3) 128

LIST OF TABLES

Table 1: Demographic (Essay 1) 37
Table 2: Study 1 (Microsoft Access) Inter-Construct Correlations 39
Table 3: Study 1 (Microsoft Access) PLS Confirmatory Factor Analysis 40
Table 4: Study 1 (Microsoft Access) Results 42
Table 5: Study 2 (iPad) Inter-Construct Correlations 44
Table 6: Study 2 (iPad) PLS Confirmatory Factor Analysis 45
Table 7: Study 2 (iPad) Results 47
Table 8: Study 3 (SAP) Inter-Construct Correlations 49
Table 9: Study 3 (SAP) PLS Confirmatory Factor Analysis 50
Table 10: Study 3 (SAP) Results 52
Table 11: Study 4 (Smartphone) Inter-Construct Correlations 54
Table 12: Study 4 (Smartphone) PLS Confirmatory Factor Analysis 55
Table 13: Study 4 (Smartphone) Results 57
Table 14: Four Models Hypotheses Comparisons 60
Table 15: Inter-Construct Correlations (Model 1) 90
Table 16: PLS Confirmatory Factor Analysis (Convergent Validity) (Model 1) 92
Table 17: Model Testing Results (Model 1) 95
Table 18: Inter-Construct Correlations (Model 2) 98
Table 19: PLS Confirmatory Factor Analysis (Model 2) 100
Table 20: Model Testing Results (Model 2) 103
Table 21: Demographics 121
Table 22: Inter-Construct Correlations 124
Table 23: PLS Confirmatory Factor Analysis 125
Table 24: Model Testing Results (Essay 3) 127

I. CHAPTER 1: WHAT DO YOU CARE? EMOTIONAL AND COGNITIVE EFFECTS ON TECHNOLOGY USE

1.1 Introduction

We are logical, because we are humans. As much as we would like to believe that we are cognitive beings, we are also emotional creatures. We all make rational, logical, as well as irrational and emotional decisions and actions in our daily lives. Former Chairman of the Federal Reserve of the United States from 1987 to 2006, Alan Greenspan in his book, "The Map and the Territory: Risk, Human Nature, and the Future of Forecasting", wrote that conscious or not, we make wagers of our future, virtually every day and the fear of future may have driven us making decisions and behaviors out of our rational control. He suggested that the emotion of fear impels unpredicted behaviors. Rodger and Gonzalez (2014) stated that "emotion is often viewed as having a negative impact on technology acceptance through fear of the software application and anxiety surrounding its use" (p. 31). Nevertheless, research has suggested that the lack of "emotional desire" (Miller, Pedell, Lopez-Lorca, Mendoza, Sterling, and Keirnan, 2015, p. 2) as a requirement may be a major cause of software project failure (El Emam and Koru, 2008). Conventionally, emotion was "written off as a psychological concept having no substance beyond the antecedent and consequent conditions that defined it" (Lazarus and Folkman, 1984, p. 28). Notwithstanding the write-off, we believe that emotion is one powerful and decisive cause of a human's precursor before behaviors and yet is understudied in technology use research.

Two TV personalities, Captain Kirk and Spock from the TV series *Star Trek*, portrayed two distinct characteristics, one emphasizing feeling and the other logic, of a human's responses, intentions, and behaviors. We, as humans, believe that our ability to think defines who we are

apart from other animals and consequently what we think leads to how we act. Research on a person's technology use has been built on the assumption that we are logical and rational and that we utilize cognitive processes. Davis's (1989) technology acceptance model (TAM) (Figure 1) represented a seminal model in technology use research and a highlight of this train of thought. TAM said that when an office worker encounters a situation of determining whether or not to accept and use a new technology, his or her cognitive processes would impact his or her behavioral intention and eventually lead to his or her use of that technology. A recent review on TAM from 1986 to 2013 has concluded that "even though TAM has already helped in explaining technology acceptance, a deeper understanding of factors contributing to TAM variables is required" (Marangunić, and Granić, 2015, p. 90). In TAM (Davis, 1993), a person's cognitive response comprised of three core constructs (perceived usefulness, perceived ease of use, and behavioral intention). This has presented a parsimonious explanation and prediction on a person's technology use. Yet in TAM, it dismissed a user's emotional responses. "What are you feeling when you were asked to use a new technology at work?" It seemed that in TAM, a person's feelings did not represent a relevant place in explaining one's behavioral intention. Are we exempt from emotional influences when facing the decision making processes of technology use? The subsequent question was whether an office worker's emotion would enhance or jeopardize his or her behavioral intention and action (use). Little or scattered research has attempted to evaluate the impact of a person's emotional side. Furthermore, if emotion was factored in with cognition, what would the relationship between those two be? Or does the situation that we are thinking and/or feeling at the same time depend on the circumstance? This study is set out to investigate the role of a person's emotional side on the impact of his or her technology behavioral intentions.

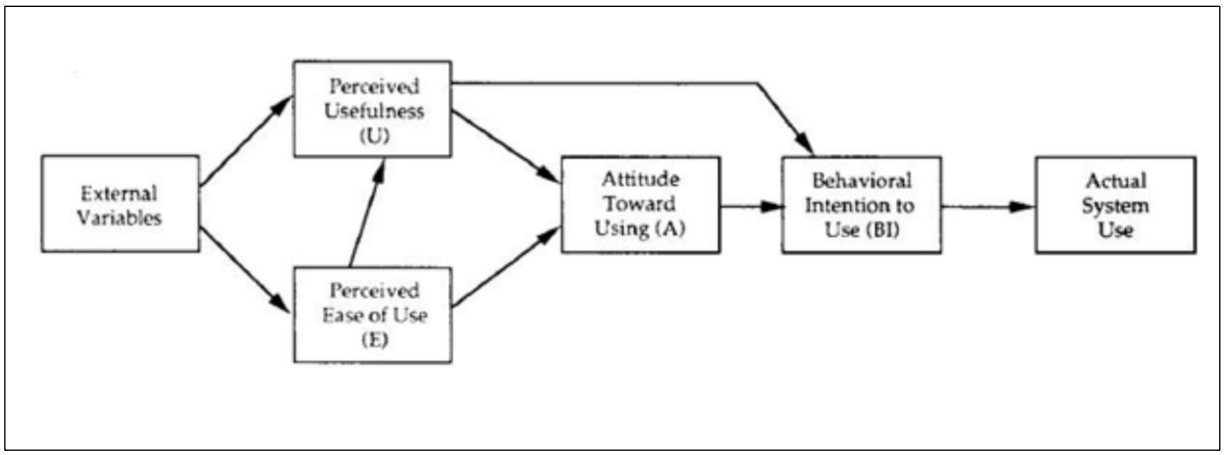

Figure 1: Technology Acceptance Model (TAM) by Davis, 1989

Emotion can overtake logic in a user's belief on technology acceptance, and emotion could be an irresistible deterrent or an enticement to behavioral intentions and behaviors. Reflected on Alan Greenspan's saying that fear induced people make irrational decisions, during a cybersecurity conference hosted by National Journal, former Homeland Security Secretary Janet Napolitano says she doesn't use email -- the reason, fear of security.[1] It is inconceivable to imagine that the Homeland Security Secretary Janet Napolitano did not use a ubiquitous communication technology (email) because of fear. The fear of a security breach evidently overweighed the convenience of the most modern and common communication technology. We would like to assume that we are a creature of logical thinking, rational, and cognitive, in terms of decision making and ultimately act on behaviors. Is Secretary Napolitano's fear of using email logical and validated? What are the implications of her actions leading to new information technologies (IT) use research? The frenzy of Apple's iPhone users is one example of how people react to technology based on their emotion. The launch of the iPhone has created a technology phenomenon and has turned users into fans and loyal followers. Nevertheless, the success of the iPhone was not based solely on emotional factors. Two core constructs from TAM

[1] See http://www.nydailynews.com/news/politics/homeland-security-secretary-janet-napolitano-email-article-1.1170915, viewed Sept 29, 2012

(perceived usefulness and perceived ease of use) have been proven in iPhone's design and success, which have heightened a user's perceptions and cognitive responses, and together affected one's technology acceptance and use.

Information systems (IS) research on the relationship between technology and a person's use has been a perpetual exploration and investigation for researchers. A primary goal of much this research stream is to discover the determining factors that affect, motivate, promote, and/or lead to user's acceptance and use of a technology both in a positive or negative way. Regardless of what type of information system or technology an IT/IS developer produces, or a company chooses to implement, the ultimate goal is to achieve the user's maximum usage and efficiency. There are limited studies on how people's emotions affect their perception, intentions, and behaviors when the situation is different. To address this research gap, we set out to investigate how emotions impact on a user's technology acceptance and adaption. A second issue has arisen, that researchers have used "user evaluations" (Karahanna et al, 1999; Kim, Chan, and Chan, 2007; Kim and Malhotra, 2005; de Guinea and Markus, 2009) as an antecedent on IT use studies, but seemed to lack support on what "user evaluations" were based on.

What is lacking in relation to current technology acceptance and adoption in the current IS research? Without a doubt, Davis's TAM has created an evolutionary and influential theme in the IS use research area. Its parsimonious model and measuring instrument have looked into IT users' internal cognitive minds. Stemming from socio-psychology, consumer behavior, and many theories, frameworks, and models from various fields and disciplines, various studies and theories on IT use were launched, learned, and published. Nevertheless, the majority of research perspectives often riveted on user's cognition; the assumption is that people would go through

cognitive processes and make rational and logical decisions. Relatively little or scattered research has been directly aimed at testing whether emotions underlie a user's behavioral intention and their relationship with one's cognitions. The majority of technology use research and studies (e.g. Benbasat and Barki, 2007; Bhattacherjee and Hikmet, 2007; Chau and Hu, 2001, 2002; Kim, Chan, Chan, and Gupta, 2004; Kim, Chan, and Chan, 2007; Moore and Benbasat, 1991; Venkatesh, 1991; Venkatesh and Davis, 1996, 2000) have followed TAM's footprints and validated the core constructs on this model. However, there was research that tapped into the non-cognitive side, for instance, trust (Gefen, Karahanna, and Straub, 2003), hedonistic IS (Hassenzahl, 2001; Van der Hejiden, 2004), fun and enjoyment (Carroll and Thomas, 1988; Chin and Gopal, 1995; Davis, Bagozzi, and Warshaw, 1992; Koufaris 2002; Venkatesh and Bala, 2008), and affect and emotion (Beaudry and Pinsonneault 2005, 2010; Centfetelli, 2004; Venkatesh, Morris, Davis, and Davis, 2003; Zhang and Li, 2007; Zhang, 2013). Nevertheless, that prior research has not given a well-grounded reasoning of the relationship between cognition and emotion. In this study, we broaden the exploratory lens in user IT adoption and use; in particular, we look into a user's emotional side and under what circumstance emotions interplay with cognition and ultimately impact on one's behavioral intentions and behaviors.

Here we intend to investigate further what other factors impact people's determinant thoughts, intentions, decisions, and behaviors. The framework of our proposed research model is as follows. First, we utilized the existing and seminal model (TAM) as our cognition factor and grounded model. Second, Cognition of Appraisal Theory of Emotion (Lazarus and Folkman, 1984) or Appraisal Theory was introduced as our fundamental and logical building blocks, while commitment and perceived control from Appraisal Theory were the antecedents of cognitive factors. Third, in contrast to Venkatesh's TAM3 (2008), we believe that cognition affects

emotions, which coincided with TRA's attitude concept (TRA defined attitude as a person's positive or negative feelings toward a target behavior). Lastly, we surmised that both cognition and emotion would impact a person's technology use. According to Lehrman's (1964) research on animal instinct, why animals did what they did, instinctual patterns are built from interactions of three elements: environmental, internal, and social. Environmental factors are external stimuli; internal factors are personality, cognition, and emotions; social factors are an individual's learning and imitating ability from others, and affective influences from the society. Based on this stream of theories and research, we believe that these three elements from Lehrman's study have paved the foundation on investigating people's appraisal process and subsequently lead to behaviors. In this study, we surmise that a user's intention and use are driven by both his/her "rational calculus" and "a set of affective or emotional responses" (de Guinea and Markus, 2009).

The contribution of this study is threefold; 1) Cognitive Appraisal Theory of Emotion (Lazarus and Folkman, 1984) to support the reasoning of the relationship between cognition and emotion in technology use research, 2) establish importance of the role of emotion impacting a person's behavioral intentions, and 3) enrich the explanation and prediction on technology use for researchers and practitioners. The overall study is not meant to be exhaustive in explaining and predicting IT use on the emotional side, as the field of cognition and emotion is already too complex and intertwined to be fully examined in one single paper. We are hoping this study raises another research angle, especially exploring the emotion factor, to provide a starting point in gaining a deeper and richer understanding of a person's IT use.

1.2 Theoretical Background and Hypotheses Development

"Cogito, ergo sum. I think, therefore I am." - René Descartes

The famous quote from the French mathematician and philosopher Descartes, one of the founders of modern rationalism, demonstrated a super quality of human beings from other animals. Are human behaviors the product of cognitive and logical decisions alone? Are we all acting logically and cognitively? By nature, we, human beings, are inquisitive, constantly asking "why", and evaluating the situations and environments, which may be beneficial or harmful to our well-being. Research on human behavior has been rooted in what and how people think. We would like to believe that what we are thinking leads to how we are behaving, and how we are thinking is mapping out the processes and possible outcomes of our decisions and behaviors. "I think, therefore I am", the question that arises here is: Will and how much our emotional side affects our behavioral intention, and subsequently our behaviors, and under what circumstances? Feelings could be a short burst or an ever-lasting fixation. For instance, people experience frustration while using a certain technology; that frustration can be a brief impact but may turn into a bias and have a prolonged effect on the users' behaviors. In "Do Machines Make History?" the title of Robert L. Heilbroner's 1967 study, he raised this rhetorical question and answered that "machines make history in some sense-that the level of technology has a direct bearing on the human drama-is of course obvious." (p. 335). Heilbroner continued to say that not all technologies make all of human and social history. Depending on the type of technology, one might have viewed that technology impacted on the political course of history, or the social attitudes impacted on the development of technology. Research on a person's technology acceptance and use has progressed in various perspectives, from early twentieth century the concept of "technological determinism" by Thorstein Veblen, an American economist and sociologist, in his theory, he believed that changes in population and technology were the driving forces of a society, to the well-known recent theory, "Technology Acceptance Model" (TAM) by

Davis in 1989, and Unified Theory of Acceptance and Use of Technology (UTAUT) by Venkatesh, et al in 2003. The research perspectives of technology use have been diversified, not only from research in the expansion of various types and features of technologies, i.e., machine, technology, hardware, software, information systems (IS), and information technologies (IT), database systems, decision support systems, etc., but also the relationships and interactions to users, and ultimately the whole society. IT research is not merely a singular and causal nomological network, but a fully and integrated web. In a way, we intend to reel silk from a cocoon.

Cognition: Technology Acceptance Model (TAM)

Understanding workers' behaviors in adoption and use of a new technology at an individual level is crucial to the success of a new technology implementation. There are a number of failures in IT implementations which have caused corporations tremendous financial and productivity loss in recent years. According to CIO magazine, Hershey's 1999 ERP/SAP project disaster cost the company $100 million and many unhappy stockholders, as well as Nike's $100 million loss in sales and 20% drop of its stock price in year 2000, and Hewlett-Packard's $160 million financial loss in 2004 (Koch, 2004). The success of Apple's "i" product line (iPhone, iPod, iPad, and iTunes store) has prompted a frantic follower/fan-base, which undoubtedly was and is a phenomenon in user acceptance and adoption.

Prior research and the body of knowledge on information technology acceptance and adoption have been drawn from sociology, philosophy, psychology, and social psychology and focused on user's cognition, which is "driven by conscious decisions to act" (de Guinea and Markus, 2009, p. 433). They have provided invaluable findings on how people perceive and ultimately act when facing a new technology at work. The fundamental assumption was that

depending on what office workers (users) perceive people would make rational, conscious, and cognitive decisions. Davis's (1989) Technology Acceptance Model (TAM) (Figure 1) has given a simple and yet logical explanation for the acceptance of new information technologies. Depending on a user's perceptions of usefulness and ease of use of a new technology, we can explain and/or predict that user's behavioral intention and use. Furthermore, his two major factors, perceived usefulness and ease of use, do make sense. If a user perceives a new information technology as both useful and easy to use to his/her work, he/she would have a higher tendency or probability (behavioral intention) to use that particular IT. However, the explanatory power of TAM has stayed at roughly 46 percent. Are there other factors we have not looked into but can take on and improve the possible research results?

The cognition theme has been had a dominant role in behavioral research. In terms of focusing on the perspectives of people' cognitive responses, research in the Human Computer Interaction (HCI) area were no exception. To name a few prevailing IT acceptance and adaption theories based on user's cognition, Technology Acceptance Model (TAM) by Davis 1989, TAM2 (Venkatesh and Davis, 2000; Venkatesh, 2000) (Figure 2) and the Unified Theory of Acceptance and Use of Technology (or UTAUT, Venkatesh et al. 2003) (Figure 4). A TAM3 was also proposed (Venkatesh and Bala, 2008) (Figure 3); all have valuable contributions on broadening the knowledge base; nevertheless, all have limited exploration on the emotional side of a user. Comparing all four models (TAM, TAM2, TAM3, and UTAUT), there are some common established relationships: behavioral intention's direct impact on use, and two core cognitive factors' (perceived usefulness and perceived ease of use) impact on behavioral intention.

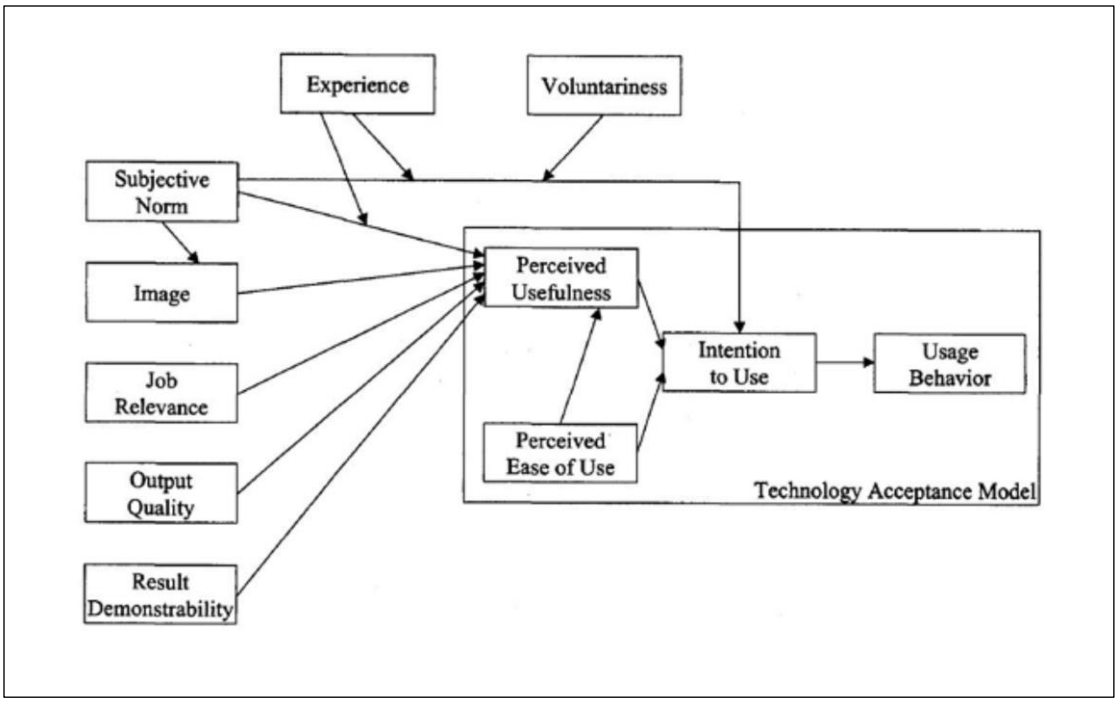

Figure 2: Technology Acceptance Model 2 (TAM2) by Venkatesh and Davis, 2000

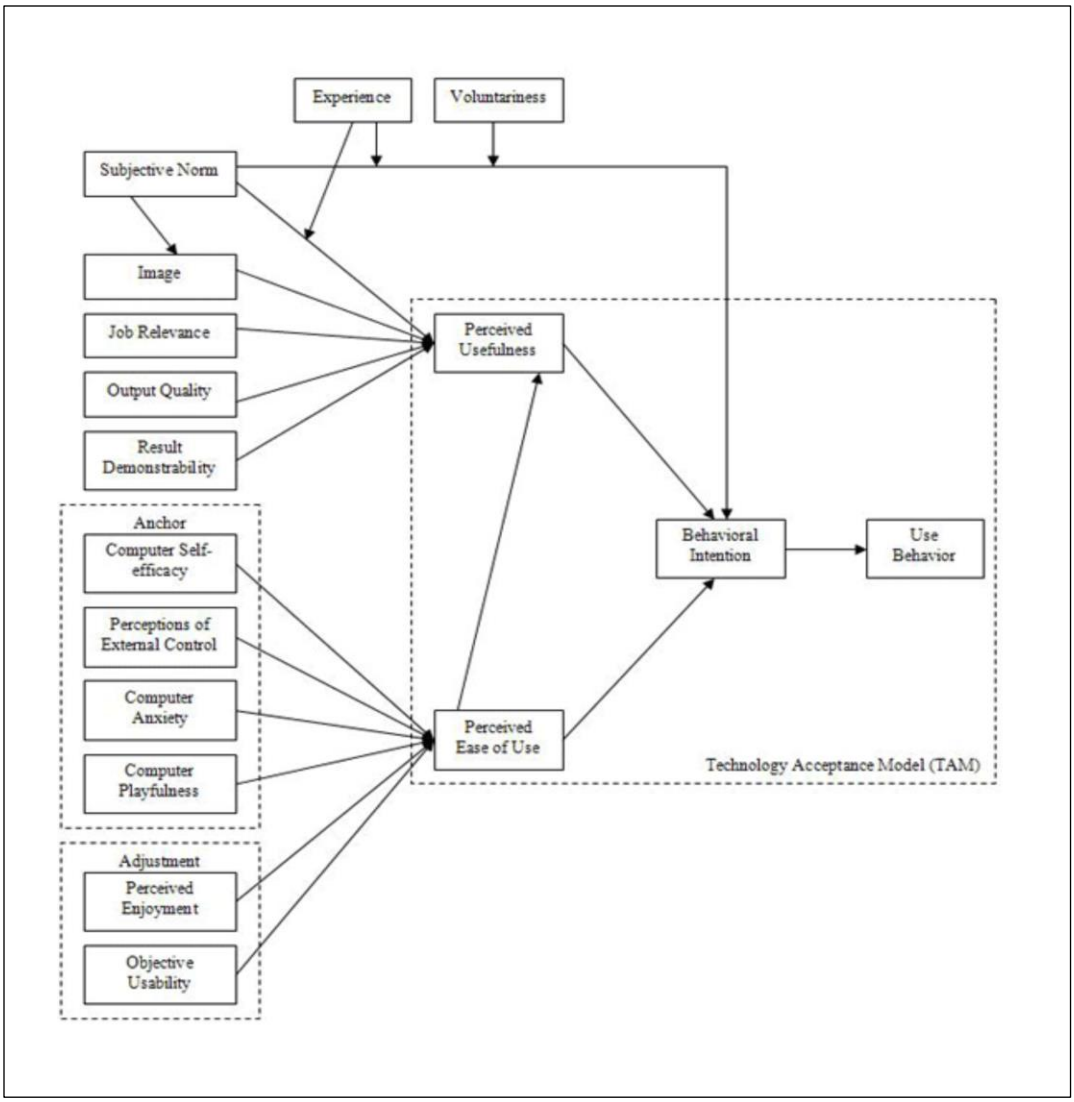

Figure 3: Technology Acceptance Model 3 (TAM3) by Venkatesh and Bala, 2008

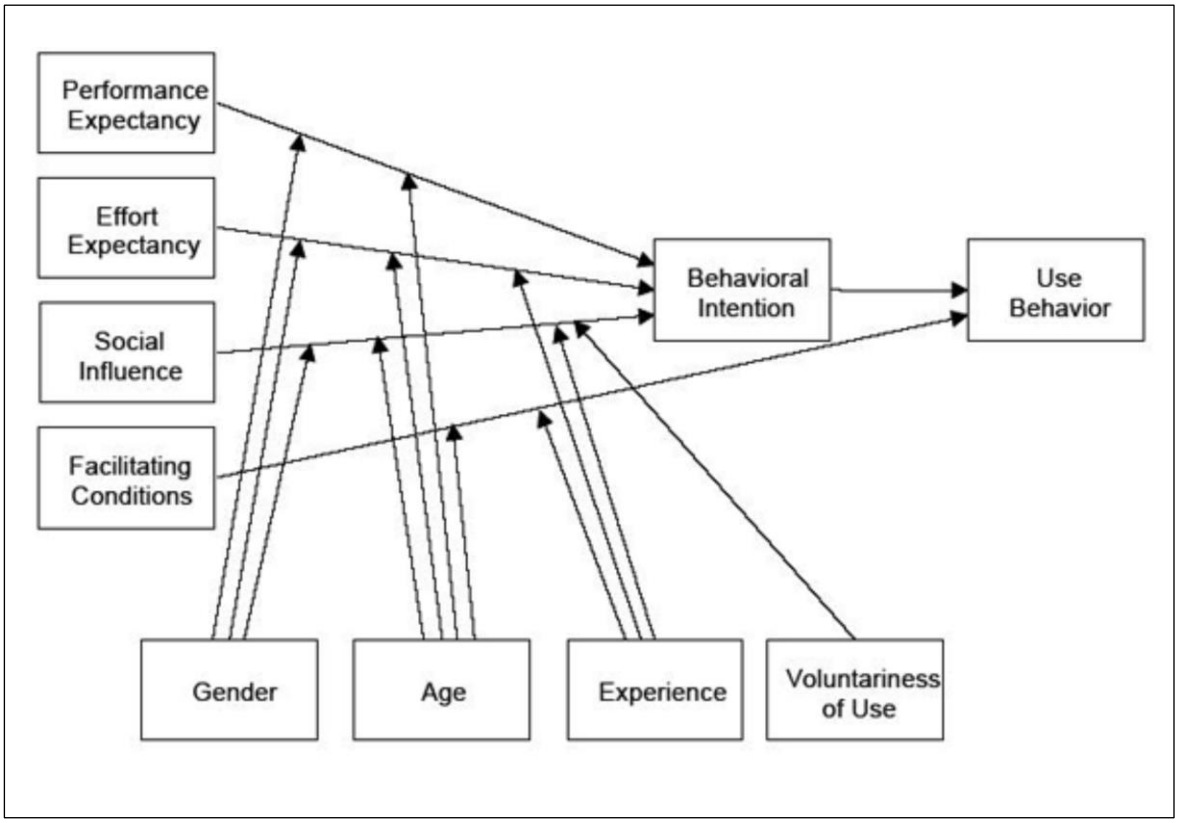

Figure 4: Unified Theory of Acceptance and Use of Technology (UTAUT) by Venkatesh, Morris, Davis, and Davis, 2003

There are some variations among the models. Davis's TAM started with an "attitude toward using" as a mediator between behavioral intention and cognitive responses (perceived usefulness and perceived ease of use) but later the attitude construct was excluded from the model, and this resulted in the same exclusion in TAM2, TAM3, and UTAUT. Five factors are added to TAM2 as antecedents of perceived usefulness; also two factors (experience and voluntariness) acted as moderators between two constructs (subjective norms and intention to use). TAM3 was built on TAM2 and added two general factors (anchor and adjustment). In this model, perceived enjoyment was treated as an antecedent of perceived ease of use, which was different from our reasoning that emotions are induced by cognition. UTAUT was built on TAM2, two core constructs were revised (perceived usefulness and perceived ease of use) and re-conceptualized as performance and effort expectancy, more moderation factors were added between cognitive factors and behavioral intention. However, emotional factors have not been considered in these extended technology use models, except in TAM3, where perceived enjoyment was included as an adjustment factor. In general, all the added factors from the extensions to the TAM model were considered as cognitive factors (e.g. job relevance, output quality, and result demonstrability from TAM2, computer self-efficacy, perception of external control, and objective usability from TAM3, and performance expectancy, effort expectancy, facilitating conditions from UTAUT), with the exception of subjective norms and image factors from TAM2 and TAM3. Moderating factors like experience, age, gender, and voluntariness of use have been added a certain degree of explanatory power. In addition, emotional factors (computer anxiety, playfulness, and enjoyment) have been treated at an antecedent of cognitive factors. We would explore further from a different lens, in this study, specifically from a user's emotional side.

In the Western philosophy and psychology, cognition and emotion have been regarded as polar opposites to each other. In most technology use research, studies often downplayed the importance of a human's emotions affecting his/her behaviors, or misplaced the emotional components in the relationship with cognition. The Theory of Reasoned Action (TRA) (Fishbein and Ajzen, 1975) (Figure 5) has established a link between a person's attitude, positive or negative feelings, and behavior. TRA is derived from social psychology and has further spurred some influential research theories, which have been applied to IS research. TRA stated that beliefs lead to attitudes, which lead to behavioral intentions, which lead to behavior itself. "An individual's positive or negative feelings (evaluative affect) about performing the target behavior" (Fishbein and Ajzen, 1975, p. 216) is the characteristic of attitude toward behavioral intention. The other core construct, social norms, was that "the person's perception that most people who are important to him think he should or should not perform the behavior in question" (Fishbein and Ajzen, 1975). Attitude and subjective norms are the two major constructs in the Theory of Reasoned Action. Ajzen (1991) extended TRA with the Theory of Planned Behavior (TPB) (Figure 6) in trying to explain and predict human's behavioral intention to action. TPB was an extension of TRA by adding the construct of perceived behavioral control. Both theories have emphasized the role of attitude in predicting human behavior. Indeed, we believe that a person's positive or negative feeling constitutes the product of one's cognitive processes and depend on the circumstance emotional responses (attitude) may outweigh logical thinking (cognition) in predicting human behaviors. The Technology Acceptance Model (TAM), which was developed and published by Davis (1989), has been widely used to investigate the adoption of information systems/technologies in a workplace and has been one of the most influential frameworks in IS. Furthermore, the Unified Theory of Acceptance and Use of Technology (UTAUT) (Venkatesh,

et al, 2003) studies user's behavioral intention and behaviors infusing Technology Acceptance Model (TAM), the Theory of reasoned Action (TRA), the Theory of Planned Behavior (TPB), social cognitive theory, and diffusion of innovation theory.

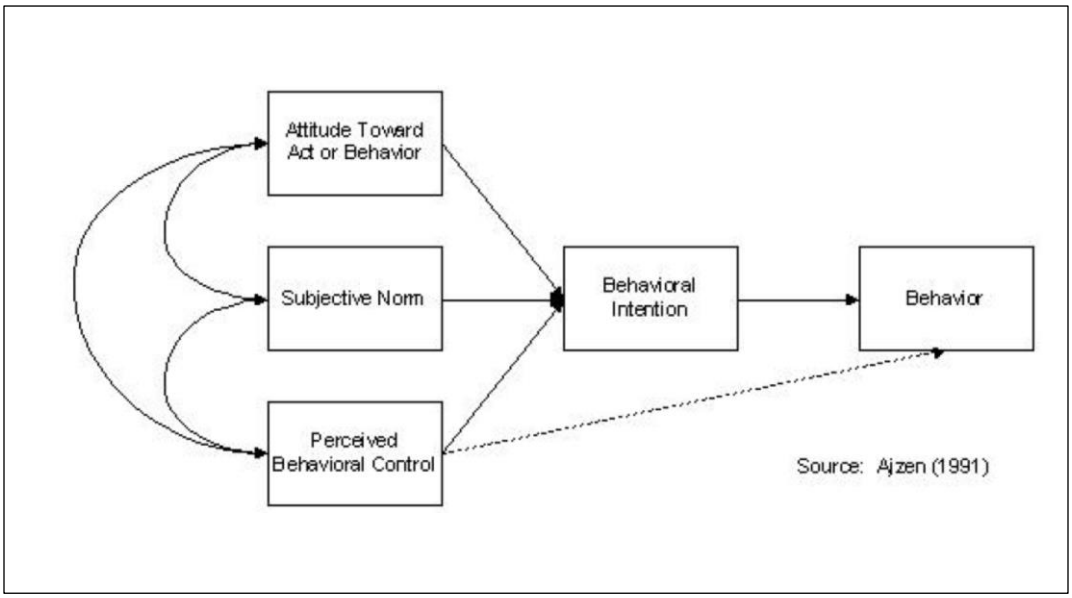

Figure 5: Theory of Reasoned Action (TRA) by Fishbien and Ajzen 1975

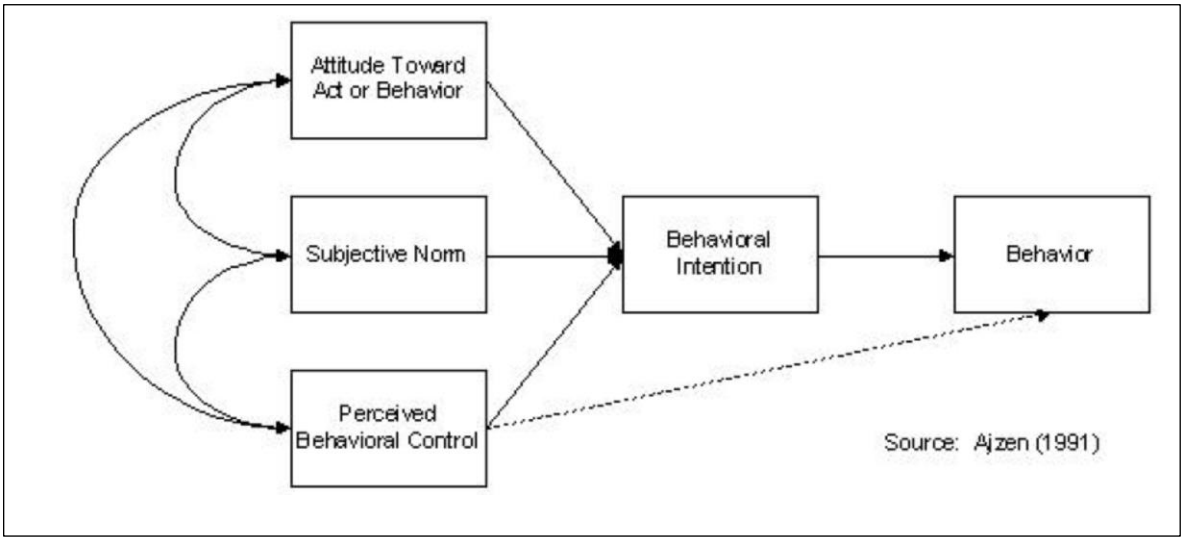

Figure 6: Theory of Planned Behavior (TPB) by Ajzen 1985 and 1991

The first three hypotheses are directly derived from Davis's Technology Acceptance Model (TAM), which has been tested and retested rigorously. The two core constructs (perceived usefulness and perceived ease of use) have been proven to affect the predictability of a person's behavioral intention in technology use. We assumed those three major constructs and their relationship as our base model and as the cognition factor of the overall model. We would test the first three hypotheses on four technologies.

H1: An increase of a person's perceived usefulness will increase his or her behavioral intention.

H2: An increase of a person's perceived ease of use will increase his or her behavioral intention.

H3: An increase of a person's perceived ease of use will increase his or her perceived usefulness.

The assumption of Davis's TAM is succinct; an office worker/user would process through his/her cognitive responses; if he/she perceives a new information technology is useful and easy to use, he/she would more than likely to have a higher behavioral intention and subsequently to use that new IT. Those two major perceptive factors are easy for readers and researchers to have an 'aha' movement and they make perfect sense. Yet, most of the research did not investigate how a user's emotional side would impact his/her new IT acceptance and adoption. There are researchers who have touched base with a user's emotional side, such as enjoyment (Chin and Gopal, 1995; Davis et al, 1999; Koufaris, 2002; Venkatesh, 1999), and anxiety (Compeau and Higgins, 1995; Compeau, Higgins, and Huff, 1999; Venkatesh et al, 2003; Todman and Monaghan, 1994; Webster and Martocchio, 1992). However, those emotional factors have not been clarified and incorporated into a cohesive model.

TAM and TPB both have enhanced our understanding of the acceptance and usage of information systems/technologies. Our questions are twofold: 1) if a new technology is required, which is involuntary for workers/users to use, would constructs of perceived usefulness and perceived ease of use from TAM be inadequate to measure a user's behavioral intention and use of the new technology?, and 2) if the former question was valid, would constructs of perceived usefulness and perceived ease of use from TAM be measuring worker/user's productivity or performance, instead of user's acceptance?

In the IS field of user acceptance, studies and research have flourished and were able to explain a certain degree of why people do the things they do and predict what technological features impact on a user's behaviors. However, in the meantime, we still have not comprehensively gained a solid knowledge of why people do the things they do. Why? Prior research, such as Technology Acceptance Model (TAM) by Davis, has built on the assumption that people all make cognitive perceptions, which in turn lead to their behaviors. We have examined research in psychology fields, and found out that to fully or further understand why people do the things they do; we also need to look into human's emotions, appraisal processes, other determinant factors, and behaviors. Lazarus and Folkman's Cognitive Appraisal Theory of Emotion (1984) (Appraisal Theory) has raised an important framework that we, humans, often assess and evaluate on "what is it in for me". Under this concept, the appraisal process is saying that we appraise the potential outcomes, which impact how we feel, and how we feel impacts how we behave, and how we behave impacts the outcomes. Inherently, the appraisal process is a circular process, but here, we have to define antecedents and consequences to prevent an endless loop (Lazarus and Folkman, 1984). There was limited research on how emotions affect a user's behavioral intention. This study will be focusing on how both cognition and emotions interact

with user's technology acceptance and adaption when the new technology is work-related, which is more utility-oriented and in a mandatory environment, and also non-work-related, where the new technology is hedonistic and more pleasure-oriented and in a voluntary environment.

Emotion

"If I am because I think, then I am undone if I feel" – René Descartes (Barbalet, 2001)

Emotions and cognition are regarded as polar spectrums. Descartes's famous quote "I think, therefore I am" promoted human's thinking ability, which evoked studies and models in human behavior focused on human's cognitive responses. The questions are: Do we merely follow rational and cognitive judgment in making decisions or intentions and subsequently act upon those decisions or intentions? Or do we act on our primal instinct or raw emotions mainly? Traditionally, cognition is the opposite of emotions. Davis' TAM is based on users' cognition that a user has to cognitively perceive both usefulness and ease of use to form a behavioral intention.

What is emotion? Zemack (2001) claimed that "an emotion is a verdict about an object or a state of affairs and thus it is a reason for action" (p. 197), which reflected on what we proposed that an emotion occurred after thinking, and an emotion promoted behaviors. Prior studies on the relationship between emotions and IT use have shown significant links, positive emotions such as enjoyment (Chin and Gopal, 1995; Davis et al, 1992; Koufaris, 2002; Venkatesh et al, 2003; Venkatesh, 2000), happiness (Beaudry and Pinsonneault, 2010; Cenfetelli, 2004), and satisfaction (Bhattacherjee, 2001), as well as negative emotions such as anxiety (Brown et al, 2004; Cenfetelli, 2004; Compeau and Higgins, 1995; Compeau and Higgins, and Huff, 1999; Todman and Monaghan, 1994; Venkatesh et al, 2003; Venkatesh, 2000; Webster and Martocchio,

1992) and fear (Cenfetelli, 2004). Lazarus and Folkman (1984) stated that "the meaning in an emotion that occurs in an encounter depends, in part, on what a person wants and believes, and in part on the nature of the situation" (p. 147). Depending on the situation a person encounters, a person's belief system is tied into what he/she wants and believes, and his/her emotions are the product of evaluative responses. For instance, when a person sees a blazing fire, he/she immediately evaluates if the situation can be controlled, and he/she is able to put out the fire or flee for safety, and in the meantime, he/she feels fear. Fright or fight is an evaluative (cognitive) response, but it also comes with emotional trauma.

The trouble of emotion in research is that there is neither consensus nor a concrete definition of emotion so far. Laros and Steenkamp (2005) said that "emotions are often conceptualized as general dimensions, like positive and negative affect, but there has also been an interest in more specific emotions" (p. 1437). Emotions have been defined into two general dimensions: positive versus negative affect (Tellegen, Watson, and Clark, 1999; Watson, Clark, and Tellegen, 1988; Watson and Tellegen, 1985) or a specific content/substance, such as anger (Bougie, Pieters, and Zeelenberg, 2003; Taylor, 1994) and surprise (Derbaix and Vanhamme, 2003), happy, joyful, enjoyable, etc. In this study, we followed the conventional concept that emotion was categorized into positive and negative affect, and operationalized perceived enjoyment as positive affect and perceived anxiety/fear as negative affect. Cabanac (2002) cited that Chapman and Nakamura (1998) stated "although an enormous literature exists on the psychobiology of affect, there is no singular or even preferred definition of emotion" (p. 69). Despite the discord, there are two opposed groups: Spinozist (emotion as an intentional attitude) vs. Humean (emotion as an unintentional state). Dutch philosopher Benedictus De Spinoza in his work "Ethics" expressed his view of emotion, which is caused by cognition. You are happy

because you just met a long-lost friend. You feel threatened or scared because you saw a huge fire. You feel angry because someone blocked your car. Those emotions are caused intentionally and by cognition, in another word, emotion is secondary and depending on cognition (James, 1890). This view has been recognized and shared by contemporary psychology (Kenny and Action, 1963; Soloman 1977). Humean's view of emotions is they are feelings or sensations, which are "mental states that have phenomenal qualities but are not about anything" (Zemack 2001, p. 197). Regardless of emotion being independent from cognition (Zajonc 1980, 1984), or secondary and dependent on cognition, Cabanac has proposed a definition of emotion, namely, as "any mental experience with high intensity and high hedonic content (pleasure/displeasure)" (2002, p. 69).

We are all aware of what emotions are, but there is not a well-defined and consensual definition of emotion. Cognition and emotions may be distinct from each other; we surmise that one cannot function without the other in reflecting how we, human beings, behave. What is emotion and what does emotion have to do with behaviors? "Data", an android character from the *Star Trek* TV series, solely acts on logical thinking and conclusion without emotions, and is also learning to be human. Emotion is a difficult concept to grasp. And oftentimes, emotion is limited by the language and unable to be clearly defined. Another criticism is the unanswered question of whether emotion is a categorical or continuous variable. Lazarus and Lazarus (1994) states that there are six ingredients that makes up emotion: 1) the fate of personal goals, 2) self or ego, 3) appraisals, 4) personal meanings, 5) provocations, and 6) action tendencies. Additionally, according to Lazarus's study, there are two motivational factors to arouse an emotion, 1) an event must transform a routine encounter into one that involves personal harm or benefit and 2) the way we judge the fate of the goal, whether actual or potential, determines whether the

emotion will be positive (for a benefit) or negative (for a harm). There are many different views on emotion. Lindsley (1951) and Duffy (1962) viewed emotion as the "causal antecedent or as the variable that intervenes between the stimulating environment and the behavioral and cognitive response" (Lazarus, and Folkman, 1984, p. 261). Emotions are hard to define in a concise way. It is like the concept of love; we all know what it is but we all have different definitions of it. Epstein (1973) regarded that emotion was an indicator of what is important to the person, and was organized in a person's self. And "Feelings can indeed be represented as a direct antecedent of behavioral intention. That is, emotional responses lead either to approach or avoidance behavioral intention" (Kim, Chan, and Chan, 2007, p. 517). In Beaudry and Pinsonneault's (2010) study on direct and indirect effects of emotions on information technology use, anger, anxiety, excitement, and happiness of emotions were the antecedents of the investigation of information technology use.

So far, scientists have discovered that in a human brain, the frontal cortex is responsible for cognition and logical thinking, and the amygdala is responsible for multiple emotional responses. Most recent developments in neurobiology (rather than considering emotions as psychological states or social phenomena) determine emotions as brain function (LeDoux, 1989). An emotion is "aroused by an appraisal of the personal significance or meaning of what is happening in that encounter" (p. 151). Furthermore, "both emotion and reason are represented widely throughout the brain and operate together as a result of the complex and fluid interconnections existing among its various parts" (p. 178). "The cerebral cortex is the area of the brain where abstract thought mainly occurs, which makes possible foresight, planning, and the complex strategies that help us cope with the stresses of living" (p. 179).

Davidson (2000) proposed that cognition needs affect/emotion and vice versa in searches of user's adaptive intention and behavior in new IT. Historically, the study of cognition (i.e., perception, decision, action, problem solving, and memory) has been the fundamental theoretical birthplace and predominately the research products in human computer interaction. Studies on the subject of users' acceptance and adoption of a new technology in information systems have mainly focused on users' beliefs and cognition, in terms of how and what cognition are shaping intentions and/or making decisions. In fact, we as human beings are making decisions and/or behaving according to how we feel in our daily lives and activities. We make emotional decisions and/or behave a certain way completely based on our emotions. For example, when people decide to get married, most of the time, the decision is based on feelings and emotions, but not logic and rational thinking. Traditionally in the Western philosophy, emotions often are treated as the opposite end of cognition. Recent neuroscience research has shown that the frontal lobe of a human's cognition center and the lower amygdala of one's emotion center are interconnected and both play an important role on deciding what intentions and actions one would take. The relationship between cognition and emotion is under debate. However, we firmly believe that emotion would not occur without cognitive processes. Besides Lazarus and Folkman's Appraisal Theory, another theory has also suggested that emotion is a perception of arousal that is labeled according to available cognitive and environmental information, according to Schachter (1966).

In our study, we set up the function of the properties of a new information technology and the setting of requiring that specific technology to be used as a tacit arousal that leads to a user's emotions. The underlying reasoning coincides with Schachter's theory that an autonomic arousal "sets the stage for an emotional reaction whose quality depends on the meaning given to

what is happening" (Lazarus and Folkman, 1984, p. 264). Research in human-computer interaction (HCI) has revealed that emotions have played an important role on how users interact with computer and information systems. Especially, negative emotions seemed to have a more profound and drastic consequence toward HCI. For example, a study by Concord Communications in the U.S. in 1999 found that 84% of help-desk managers surveyed said that users admitted to engaging in "violent and abusive" behavior toward computers (Picard, 1999).

According to Mandler (1975), an arousal "provides the emotional tone for a particular cognition, and cognition provides the emotional state" (p. 68). Continuing on this thread of studies on emotions, we believe that cognition factors (perceived usefulness and perceived ease of use) are the antecedents of emotional factors (perceived enjoyment and perceived anxiety/fear), and emotional factors would have an impact on a person's behavioral intention. In other words, emotional factors are mediating factors between cognition and behavioral intention. "Virtually every theorist in personality and psychopathology has found it necessary to incorporate anxiety, in one form or another, in formulations with regard to acquisition, stability, and change of human behavior" (McReynolds, 2015, p. 281). Therefore, we hypothesized that a person's perceived enjoyment (positive affect) would positively enhance a person's behavioral intention to use a new technology, and perceived anxiety/fear (negative affect) would worsen a person's behavioral intention. Also, a person's perceived usefulness and perceived ease of use would have a positive impact on his/her perceived enjoyment. The more a person perceived a technology to be useful and easy to use, the more enjoyment he/she will have. A person's perceived usefulness and perceived ease of use would have a negative impact on his/her perceived anxiety/fear. The more a person perceived a technology as useful and easy to use, the less anxiety/fear he/she will have. Thus, we argue that positive affect (perceived enjoyment) will

increase a person's behavioral intention, and the negative affect (perceived anxiety/fear) will decrease a person's behavioral intention. It is human nature that when we perceived something is positive (fun, happy, exciting, enjoyable, etc.), we tend to embrace that "something" at ease, vice versa.

H4: An increase of a person's perceived enjoyment will increase his or her behavioral intention.

H5: An increase of a person's perceived anxiety/fear will decrease his or her behavioral intention.

Like we suggested earlier, we regard cognition as an evaluative affect or response, and an antecedent to emotions. The principle of our reasoning is that when a person perceives positive evaluations, they lead to positive emotions, and when one perceives negative evaluations, they lead to negative emotions. Therefore, we argue that when a technology user perceives a positive evaluation (usefulness or ease of use); it is more than likely that this user will have a positive emotion (enjoyment). The opposite also should hold true.

H6: An increase of a person's perceived usefulness will increase his or her perceived enjoyment.

H7: An increase of a person's perceived usefulness will decrease his or her perceived anxiety/fear.

H8: An increase of a person's perceived ease of use will increase his or her perceived enjoyment.

H9: An increase of a person's perceived ease of use will decrease his or her perceived anxiety/fear.

Cognitive Appraisal Theory of Emotion (Appraisal Theory)

Lazarus and Folkman (1984) said "appraisal determines emotion" (p. 25); from that, we inferred that appraisal is a cognitive process. We, as human beings, appraise, assess, estimate, evaluate, and even guess consciously or unconsciously to make sense of our daily lives and

events. We evaluate our surroundings and events to formulate a possible outcome, which may be dangerous, fun, or indifferent. According to the potential or possible outcome, we make decision(s). There may be logical or illogical thinking; together, those considerations drive us to the next step. Appraisal Theory has developed and evolved as a prominent theory in the field of communication and psychology by testing affect and emotion. In the past fifty years, this theory has expanded exponentially with the dedication of two prominent researchers: Magda Arnold and Richard Lazarus, amongst others, who have contributed appraisal theories. The studies are to investigate why people react to the same things and/or situations differently. Based on Appraisal Theory, an individual would appraise the disruption, in which the primary appraisal is to assess the consequences, that may be beneficial and/or challenging, the secondary appraisal is to assess the coping efforts. We surmise that with the differences of characteristics of a new technology besides cognition, emotions would play a different role on the interaction with user's technology acceptance and adaption. Also, the personality of a user could impact his/her cognitive and emotional processes.

We, consider ourselves as an intelligent being, consistently appraising, evaluating, assessing, and making sense of our surroundings consciously and/or unconsciously. "Intelligent creatures perceive and comprehend the world around them. To survive and flourish they need to decide whether events are or are not significant for their well-being, and in what way. Without personal significance, there is no emotion and appraisal is "an evaluative judgment about this significance"" (Lazarus and Lazarus, 1994, p.143). In terms of researching a user's intention and behaviors toward the acceptance of a new technology, we believe that a person's intention is impacted by the product of cognition and emotion, and that this product is influenced by a person's appraisal of a particular situation. Lazarus and Lazarus (1994) stated that "appraisal

consists of two main kinds of judgment, 1) we must decide whether we have anything at stake in what is happening, and 2) if we have decided that a situation is important for our personal well-being, we must evaluate our options for doing something about it. What must be done? Will it work? Can we do what must be done? And there are three kinds of primary outcomes of an appraisal: 1) irrelevant, 2) benign-positive, and 3) stressful" (p. 32). Simply put, there are three possible "results" or "consequences" of an appraisal: 1) indifferent, it may not matter or relate to our well-being, 2) beneficial, it may make us feel good, or 3) harmful, it may cause us intense reaction or threaten of possible negative outcomes. Lazarus (1984) regarded that appraisal "must always actively negotiate between our personal agendas – that is, goals and beliefs – and the characteristics of the environment" (p.144). And the "uncertainty about what is happening, incidentally, is one of the main reasons people interpreted what is happening in different ways" (p. 145). We believe that we can utilize this stream of studies and theories to find out why, given the same new technology, users react differently. Based on the Appraisal Theory, we learned that appraisal involved cognitive processes, and emotional responses occurred only in the presence of certain goals, and that both cognition and emotion evoked a person's intention to act.

First, we surmise that under a work/office setting (involuntary environment), we would most likely "need" to accept a new technology, especially when we are required or asked to use this technology to perform daily tasks. The assessed consequences of this circumstance are that as an office worker, we need to accept the technology or we could lose employment or would not be successful in the company. Different from what TAM suggested, we surmise that under an involuntary/office environment, office workers do not have a choice but to use whatever technology the company provided. However, in this study, we believe that Lazarus's Appraisal Theory provides a crucial foundation to pave a logical roadmap in an attempt to configure a

user's interplayed result of cognition and emotion. We surmise and appraise that when a user is facing a new technology, which is with a utility characteristic, and under an involuntary work environment, the primary appraisal could be stressful appraisal, which a user could see as threefold consisting of, harm/loss, threat, and challenge.

Lazarus and Folkman (1984) said that "cognitive appraisal can be most readily understood as the process of categorizing an encounter, and its various facets, with respect to its significance for well-being" (p.31), and argued that "appraisal is often taken to be a conscious, rational, and deliberate process" (p.52), yet unconscious appraisals were not always so clear. They continued to say that people make unconscious appraisals while feeling threatened. They also stated that "there is an old phenomenological tradition in psychology that the meaning of an event to the person shapes the emotional and behavioral responses" (p. 52). They referred to the concept of cognitive appraisal as the evaluative process between the encounter and reactions, in which the person evaluates "the significance of what is happening for his or her well-being" (p. 19). We believe that cognitive appraisal is appropriate in building and supporting our reasoning and research model that a new technology represents an encounter to a person and this person will evaluate the significance of what is happening to his or her well-being, and through this evaluation, it will lead to his or her emotional and behavioral actions or reactions. Earlier we have explored Epstein's self-theory (1976) that he stressed that "emotions are the indicators of what is important to the person" (p. 79). He stated that "the most important function of a self-theory is to maximize the pleasure/pain balance of a person" (p. 187). Lazarus and Folkman (1984) reiterated that "appraisal is a private, subjective process that has an uncertain relationship to the objective environment" (p. 46). What is the environment here? We surmise that this environment is a function of the new technology consisting of situational and social factors.

Commitment and Control

Lazarus and Folkman's cognitive appraisal has raised two salient personal characteristics, commitments and beliefs, which could impact a person's appraisal thresholds. "Given an encounter, those two characteristics would determine a person's understanding of what is important to him or her, the consequence of his emotions and coping efforts, and the basis for evaluating possible outcomes" (Lazarus and Folkman, 1984, p. 55). Lazarus and Folkman defined perceived control as "the extent to which people assume they can control events and outcomes of importance" (1984, p. 66). Studies (Lazarus and Folkman, 1984; Rotter, 1975) have shown that with the relationship between the situation and perceived control, particularly when a situation is highly ambiguous, a person with internal locus of control (which refers to "the belief that events are contingent upon one's own behavior" (Lazarus and Folkman, 1984, p. 66) might be expected to appraise the situation as controllable, whereas a person with external locus of control, which refers to "the belief that events are not contingent to one's actions, but upon luck, chance, fate, or powerful others" (Lazarus and Folkman, 1984, p. 66) might be expected to appraise the situation as uncontrollable. When a situation is not highly ambiguous, the appraisal of controllability would be impacted more by the characteristics of the situation, but not general beliefs (Lazarus and Folkman, 1984). We expect that the characteristics of a utility oriented new technology under an involuntary work-related environment would have a higher ambiguity than of a pleasure oriented technology under a voluntary environment. Lazarus (1984) has made a distinction regarding belief about control, which could be "a belief in a specific context or a general belief" (p. 69). He has also pointed out that researchers use self-efficacy, illusion of control, or the sense of control (Bandura, 1977; Langer, 1975; Lefcourt, 1973) as measured in a

specific context. In this study, we follow this train of thoughts and definitions, but not on a general belief, which is an expression of one's sense of control over one's life.

One consideration of possible outcomes of a person's appraisal is the characteristics of the technology. Studies have showed that the features or characteristics of a technology may contribute the outcomes of an assessment. Griffith (1999) provided a framework to juxtapose "technology features as triggers for sense-making in the context with later-stage models of technology understanding and use" (Dutta, 2008, p. 59). DeSanctis and Poole (1994) referred to 'technological properties', which they felt were equivalent to Griffith's technological features. Nevertheless, both stressed the importance of the nature of the technology itself. However, since Griffith stated that there is no strong theory suggesting a typology of feature, we have chosen to split technology into two major types: utility-oriented and pleasure-oriented technologies.

Research in the IS/IT field has not clearly taken into consideration what impact technology features or orientations have on use. We believe that the feature of a technology would play a determining role on a person's appraisal processes and it would influence a person's cognition and emotion. Dutta's (2008) critique on the role of information features in technology use pattern stated that "Researchers have either focused only on technology, neglecting the importance of human agency or have looked only at the social dynamics and human agency without proper reference to the features of the technology" (p. 61). Researchers have found that technologies differ on their component features (Griffith, 1999; Griffith and Northcraft, 1994; Culnan and Markus, 1987, Orlikowski, 1992, 2000) and the organizational effects, in terms of their use pattern result from the use of features (Griffith and Northcraft, 1994).

Lazarus and Folkman (1984) stated that "commitments express what is important to the person, what has meaning for him or her, and they underlie the choices people make, whereas

their beliefs determine how a person evaluates what is happening or is about to happen" (p. 80). Davis's TAM has minimized the role of personal factors; however, we believe that, based on the characteristics of a new information technology and the requirement circumstance, personal factors would have an influential impact on a person's cognition and emotions. Research has shown that when people feel confident of their power or ability to control their tasks or environment, they tend to perceive more positive feelings (Lazarus and Folkman, 1984; Murphy and Moriarty, 1976). Carlson (1982) had a review of four models of perceived control in the context of biofeedback, where perceived control is about a person whose mastery and confidence of feelings and situation-specific expectations is measured. Lazarus and Folkman (1984) stated that "beliefs about control, whether shaped more by person factors or situational contingencies, play a major role in determining the degree to which a person feels threatened or challenged in a stressful encounter" (p. 76), and concluded that "one's belief in one's ability to control an event influences how that event is appraised and, through appraisal, subsequent coping activities" (p. 77). We interpret that beliefs of control have substantial influences on a person's perception and emotional state of mind, and ultimately impact a person's behaviors. In the event of accepting and/or adopting a new information technology, a person's belief of control should have a significant impact on how he/she appraises the event.

Appraisal Theory provided a framework suggesting that a person's "personal factor" (commitment and perceived control) would impact his/her cognition. A new technology user's personal factors (commitment and perceived control) would positively impact his/her cognitive responses (perceived usefulness and perceived ease of use). The personal factor is a predisposition of thinking. When a person is committed to a new technology, that commitment will positively enhance his/her perceived usefulness and perceived ease of use of that technology.

Appraisal Theory has stated that "commitments express what is important to the person, what has meaning for him or her. They determine what is at stake" (Lazarus and Folkman, 1984, p. 56). Therefore, when a person feels that a technology has meaning to him or her, he or she will develop a sense of commitment, which will be positively correlated to his or her perceived usefulness and perceived ease of use of that technology.

H10: An increase of a person's commitment will increase his or her perceived usefulness.

H11: An increase of a person's commitment will increase his or her perceived ease of use.

Lazarus and Folkman (1984) have stated that "a general belief about control concerns the extent to which people assume they can control events or outcomes of importance" (p. 66). And when a person has perceived control of a new technology, that perception of control will positively enhance his/her perceived usefulness and ease of intention to use of that technology.

H12: An increase of a person's perceived control will increase his or her perceived usefulness.

H13: An increase of a person's perceived control will increase his or her perceived ease of use.

Social Norms

Studies have shown that a person's "self" is influenced by his or her social surroundings (Venkatesh and Davis, 1996, 2000; Venkatesh, Morris, Davis, and Davis, 2003). In other words, social norms have a significant impact on a person's well-being. A social outcome is a total function and accumulation of individual's emotions and interactions with each other. Apple's products (iPod, iPhone, iPad, and MacBook) have created a cult-like phenomenon among their users. The success of the iPhone has changed not only the personal use of a smartphones but also

corporations' communication choice for their employees. The "like" factor of Apple's products dominates over most of Apple competitors'. The emotional attachment toward Apple's products, especially the iPhone, prompts waves of customers to the storefronts and Apple's Website, whenever a new version of the iPhone is launched to the market. The "like" feature on Facebook.com hopes to generate and heighten users' favorable feelings toward its site. Twitter.com connects a user's and his/her followers' emotions together using a 140-word count statement. In previous theories and research on a person's "self" concept (Hilgard, 1949; Epstein, 1976), the "self", according to Hilgard (1949), is in part a combination of interpersonal motives and attitudes that are of central importance to the person. Epstein (1976) stressed that emotions are the indicators of what is important to the person. In order to understand or predict a person's behaviors, we need to understand both what the logical thinking (cognition) is along with what is important to the person (emotions).

In TRA, subjective norms were defined as "the person's perception that most people who are important to him think he should or should not perform the behavior in question" (Fishbein and Ajzen 1975, p. 302). Social norms have a tremendous impact on the "self" in a person. We, as humans, are social beings. We were born, live, learn, and are taught with and by others, who are important to us. Thompson, Higgins, and Howell (1991) have stressed the importance of social factors in influencing human behaviors that "social factors are the individual's internalization of the reference group's subjective culture, and specific interpersonal agreements that the individual has made with others, in specific social situation" (1991, p. 126). Subjective norms or social norms have a suggestive power over individuals. We often seek a form of approval from people, who we think are important to us. This type of a form of approval may cause a person's positive or negative feelings. We believe that positive or supportive social

norms align with a person's positive emotion and vice versa. Thus we hypothesized that social norms have an impact on emotional factors that when a person perceives a positive or approval sense of "social norms", he/she will perceive a higher enjoyment, and when a person perceives a negative or disapproval sense of "social norms, he/she will perceive a higher anxiety/fear.

H14: An increase of a person's social norms will increase his or her perceived enjoyment.

H15: An increase of a person's social norms will decrease his or her perceived anxiety/fear.

The complete research model is shown in Figure 7.

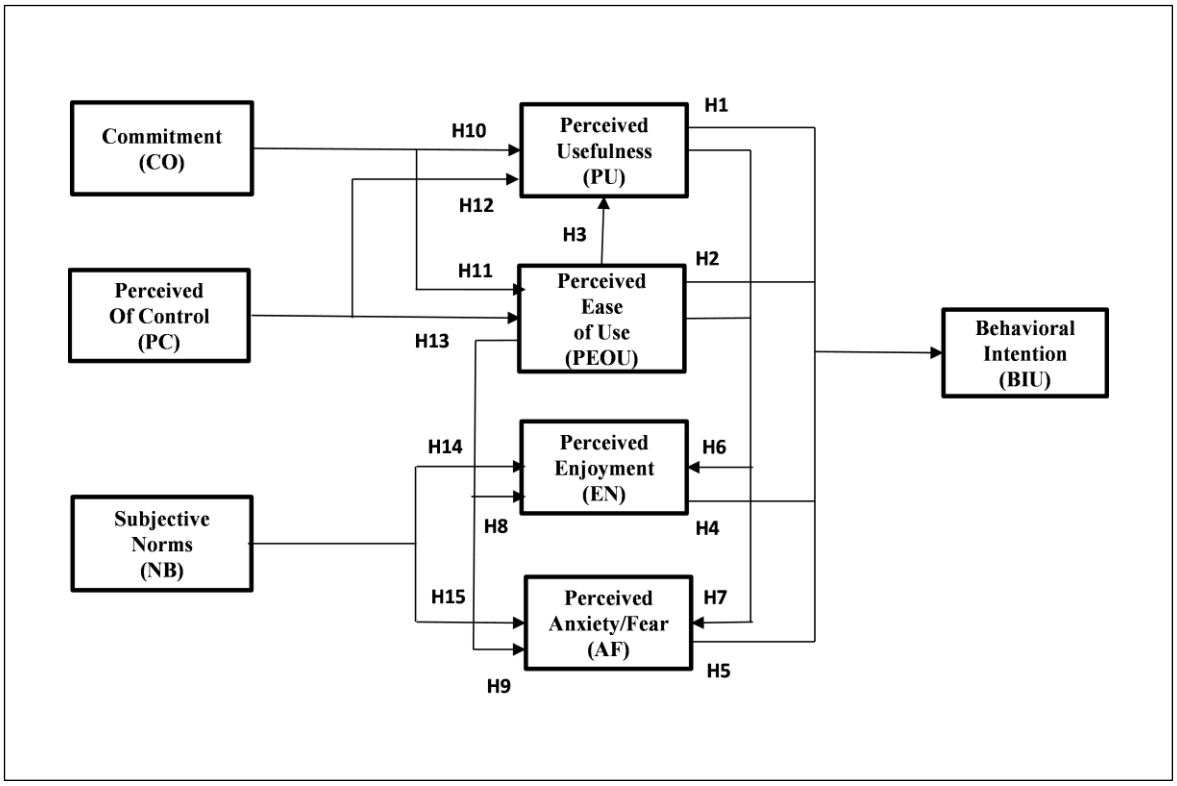

Figure 7: Research Model (Essay 1)

1.3 Research Methodology

Data Collection

The data for this study was collected and compiled using an online survey from one midsize university in the U.S. The questionnaire was organized into different sections to separate demographic information and behavioral constructs. A 7-point Likert scale was used to measure each measuring item (1=strongly disagree to 7=strongly agree). The questionnaire items are shown in Appendix 1.

Instrument Development

In this study, we have utilized existing items from previously published research. A recent study has shown that in fact, "almost all social science research today uses measurements approaches published in prior research studies or scale handbooks" (e.g. Bearden, Netemeyer, and Haws, 2011). Measurement items for the commitment construct are derived and modified from Beatson, Coote, and Rudd (2006), the "perceived of control", "perceived enjoyment", and "perceived anxiety/fear" constructs are from Venkatesh (2000), and the "perceived usefulness", "perceived ease of use", "behavioral intention", and "social norms" constructs are from Davis (1989). This study uses a between-group design and tests on four different technologies, 1) Microsoft Access, 2) SAP (Access and SAP are categorized as utility-oriented technologies), 3) iPad, and 4) smartphone (iPad and smartphone are categorized as pleasure-oriented technologies). When utilizing existing measurement items, item creation, scale development, and sorting procedures will not be used, since the measurement items have been tested for reliability and validity for the constructs.

1.4 Data Analysis

Data analysis used Structural Equation Modeling (SEM), which is a statistical technique, and has been widely adapted in social science research. SEM incorporates two models, a structural model for testing causal relationships, and a measurement model for measuring each construct or latent variable. The main goal of SEM is to test and estimate causal relationships, thus to explain the variance of target dependent variables. Partial Least Squares – Structural Equation Modeling (PLS - SEM) technique was used in the following studies. PLS is a form of SEM method and a predictive analysis. PLS path modeling analyzes constructs or latent variables in a causal network, and then estimates explained variances.

For study 1 (Microsoft Office – Access), there were 156 responses. The demographic statistics are as followed: gender (76 males = 48.7 percent, 75 females = 48.1 percent and 5 missing reports = 3.2 percent, with an average age of 22.57 (standard deviation = 4.03 years) across undergraduate and graduate students. For study 2 (iPad), there were 128 responses. The demographic statistics are as followed: gender (73 males = 55.7 percent, 55 females = 42.0 percent and 3 missing reports = 2.3 percent, with an average age of 22.43 (standard deviation = 3.67 years) across undergraduate and graduate students. For study 3 (SAP), there were 112 responses. The demographic statistics are as followed: gender (78 males = 61.9 percent, 34 females = 27.0 percent and 14 missing reports = 11.1 percent, with an average age of 24.41 (standard deviation = 4.90 years) across undergraduate and graduate students. For study 4 (smartphone), there were 103 responses. The demographic statistics are as followed: gender (57 males = 54.8 percent, 46 females = 44.2 percent and no missing reports, with an average age of 23.08 (standard deviation = 6.67 years) across undergraduate and graduate students. These statistics are shown in Table 1.

	Access	iPad	SAP	smartphone
Female	75	55	34	46
Male	76	73	78	57
Missing	5	3	14	0
Average Age	22.57	22.43	24.41	23.08
Standard Deviation	4.03	3.67	4.90	6.67
Total	156	131	126	103

Table 1: Demographic (Essay 1)

In order to assess the quality of the measurement model, we examined the reliability and validity of the constructs. The recommended acceptable reliability and validity assessments of this study are through the following criteria: 1) reliability (internal consistency) is demonstrated by composite reliability greater than 0.70, 2) convergent validity is demonstrated by the average variance extracted (AVE) greater than 0.50, and loadings in a confirmatory factor analysis (CFA) greater than 0.70, and 3) discriminant validity is evaluated by two criteria: the square root of the average variance extracted (AVE) greater than any of the inter-construct, and indicators' loadings are greater than other indicators of other constructs' loadings (Fornell and Larcker, 1981) and of all indicators' (items) loading of one construct should be greater than all of its loading on other constructs (cross loadings) (Chin, 1998; Fornell and Larcker, 1981). In addition, sample sizes of all four studies exceed the Cohen's (1992) recommended sample size (sample size > 58, at 1% significant level, minimum $R^2 = 0.50$, and with four arrows point at a construct) in PLS-SEM with a statistical power of 80%.

Reliability and Validity Assessments: Study 1 (Microsoft Office – Access)

To assess the reliability (internal consistency) of study 1 (MS Access), the composite reliability (Table 2) of all eights constructs ranged from 0.85 to 0.95, which are above the 0.70 recommended level (Fornell and Larcker, 1981). AVE (Table 2) indices ranged from 0.73 to 0.90,

which are above the 0.50 recommended levels. Loadings (Table 3) from our confirmatory factor analysis table ranged from 0.83 to 0.95, which are above the 0.70 recommended level, and they did not cross-load on other constructs. Both results satisfied convergent validity. To assess the discriminant validity, we examined the square root of the average variance extracted (AVE), which should be greater than any of the inter-construct, and indicators' loadings should be stronger than other indicators of other constructs' loadings (Chin, 1998). All eight constructs satisfied these two criteria, loadings from each construct are greater loadings of other constructs and the square root of AVE of each construct is larger than its correlation with other constructs (bold values on the diagonal of Table 2), and the condition of cross loadings is also satisfied (Table 3).

Since we surveyed four technologies simultaneously using the same measuring items for each construct across four technologies, we anticipated that some construct in different technology testing may not hold the same reliability and validity standards like others. It may have tarnished certain constructs, but should not diminish the overall prediction of hypotheses.

	Composite Reliability	AVE	Behavioral Intention	Commitment	Perceived Anxiety/Fear	Perceived Control	Perceived Ease of Use	Perceived Enjoyment	Perceived Usefulness	Social Norms
Behavioral Intention	0.91	0.84	**0.92**							
Commitment	0.84	0.73	0.19	**0.85**						
Perceived Anxiety/Fear	0.92	0.75	-0.33	0.13	**0.87**					
Perceived Control	0.85	0.74	0.60	0.18	-0.37	**0.86**				
Perceived Ease of Use	0.91	0.84	0.59	0.12	-0.49	0.69	**0.92**			
Perceived Enjoyment	0.95	0.90	0.66	0.16	-0.24	0.50	0.50	**0.95**		
Perceived Usefulness	0.92	0.85	0.69	0.20	-0.26	0.51	0.51	0.54	**0.92**	
Social Norms	0.87	0.77	0.60	0.28	-0.06	0.39	0.36	0.52	0.53	**0.88**

*Diagonal elements in the correlation of constructs matrix are the square root of the average variance extracted (AVE).
For adequate discriminant validity, diagonal elements should be greater than corresponding off-diagonal elements.

Table 2: Study 1 (Microsoft Access) Inter-Construct Correlations

	AF	BI	CO	EN	PEOU	NB	PC	PU
AF1	0.83	-0.29	0.12	-0.16	-0.39	-0.10	-0.27	-0.17
AF3	0.85	-0.28	0.11	-0.21	-0.38	-0.09	-0.36	-0.24
AF5	0.91	-0.32	0.09	-0.24	-0.47	-0.09	-0.35	-0.24
AF6	0.87	-0.26	0.13	-0.20	-0.45	0.05	-0.32	-0.25
BI1	-0.38	0.92	0.13	0.60	0.59	0.52	0.60	0.63
BI2	-0.23	0.91	0.22	0.61	0.50	0.58	0.51	0.63
CO12	0.11	0.14	0.90	0.15	0.15	0.18	0.15	0.18
CO14	0.11	0.21	0.80	0.12	0.05	0.32	0.15	0.17
EN3	-0.20	0.58	0.11	0.94	0.44	0.46	0.45	0.47
EN4	-0.25	0.66	0.19	0.95	0.51	0.52	0.50	0.55
PEOU3	-0.45	0.52	0.05	0.42	0.91	0.30	0.55	0.44
PEOU4	-0.45	0.56	0.17	0.50	0.93	0.35	0.71	0.49
NB1	-0.02	0.51	0.24	0.49	0.29	0.89	0.33	0.46
NB4	-0.10	0.54	0.26	0.43	0.35	0.87	0.35	0.47
PC3	-0.29	0.51	0.15	0.47	0.61	0.35	0.87	0.46
PC4	-0.36	0.53	0.16	0.39	0.58	0.31	0.85	0.41
PU3	-0.24	0.63	0.22	0.52	0.48	0.49	0.46	0.93
PU5	-0.24	0.64	0.15	0.47	0.46	0.49	0.48	0.92

AF = Perceived Anxiety/Fear
BI = Behavioral Intention
CO = Commitment
EN = Perceived Enjoyment
PEOU = Perceived Ease of Use
NB = Social Norms
PC = Perceived Control
PU = Perceived Usefulness

Table 3: Study 1 (Microsoft Access) PLS Confirmatory Factor Analysis

Model Testing: Study 1 (Microsoft Office – Access)

After testing the reliability and validity of the measurement model, PLS path analysis was used to evaluate the proposed research model and the relationships among the constructs. T-statistics were calculated and examined to determine whether the significant level is efficient to support the path. Table 4 shows the overall results of the study. First, the model presents a 63% result of explaining variance in a user's behavioral intention, which in general exceeded the expected result than previous user technology acceptance and use research, which ranged from

30.3% to 48.7% (Venkatesh, 2003). Three constructs, perceived usefulness, perceived ease of use, and perceived enjoyment, have supported the hypothesized relationships to a user's behavioral intention, but not the construct of perceived anxiety/fear. 32% explaining variance of perceived usefulness was presented by the supported constructs of perceived ease of use and perceived control, but not from the construct of commitment. 47% explaining variance of perceived ease of use was presented by the supported construct of perceived control, but not from the construct of commitment. 26% explaining variance of perceived anxiety/fear was supported by the construct of perceived ease of use with a high (-0.502) effect, but not by the constructs of perceived usefulness and social norms. 42% explaining variance of perceived enjoyment was supported by all three constructs, perceived usefulness, perceived ease of use, and social norms.

Dependent Variable	Independent Variable(s)	R^2	β	Hypothesis Supported
Behavioral Intention		0.63		
	Perceived Usefulness (PU)		0.39***	Yes
	Perceived Ease of Use (PEOU)		0.19**	Yes
	Perceived Enjoyment (EN)		0.34***	Yes
	Perceived Anxiety/Fear (AF)		-0.06	No
Perceived Usefulness		0.32		
	Commitment (CO)		0.11	No
	Perceived Control (PC)		0.28*	Yes
	Perceived Ease of Use (PEOU)		0.30**	Yes
Perceived Ease of Use		0.47		
	Commitment (CO)		-0.02	No
	Perceived Control (PC)		0.70	Yes
Perceived Anxiety/Fear		0.26		
	Perceived Usefulness (PU)		-0.10	No
	Perceived Ease of Use (PEOU)		-0.50***	Yes
	Social Norms (NB)		0.17	No
Perceived Enjoyment		0.42		
	Perceived Usefulness (PU)		0.24***	Yes
	Perceived Ease of Use (PEOU)		0.27***	Yes
	Social Norms (NB)		0.30**	Yes

* Significant at 0.1
** Significant at 0.05
*** Significant at 0.01

Table 4: Study 1 (Microsoft Access) Results

Reliability and Validity Assessments: Study 2 (iPad)

The same evaluation processes were conducted as in study 1, the reliability (internal consistency) of study 2 (iPad), the composite reliability (Table 5) of all eights constructs ranged from 0.81 to 0.93, which are above the 0.70 recommended level (Fornell and Larcker, 1981). AVE (Table 5) indices ranged from 0.68 to 0.86, which are above the 0.50 recommended level. Loadings (Table 6) from our confirmatory factor analysis table ranged from 0.82 to 0.94, which are above the 0.70 recommended level, and they did not cross-load on other constructs. Both results satisfied convergent validity. To assess the discriminant validity, we examined the square root of the average variance extracted (AVE), which should be greater than any of the inter-construct, and indicators' loadings should be stronger than other indicators of other constructs' loadings (Chin, 1998). All eight constructs satisfied these two criteria, loadings from each construct are greater loadings of other constructs and the square root of AVE of each construct (bold values on the diagonal of Table 5) is larger than its correlation with other constructs, and the condition of cross loadings is also satisfied (Table 6).

	Composite Reliability	AVE	Behavioral Intention	Commitment	Perceived Anxiety/Fear	Perceived Control	Perceived Ease of Use	Perceived Enjoyment	Perceived Usefulness	Social Norms
Behavioral Intention	0.93	0.86	**0.93**							
Commitment	0.90	0.82	0.27	**0.90**						
Perceived Anxiety/Fear	0.92	0.75	-0.14	0.15	**0.87**					
Perceived Control	0.81	0.68	0.34	0.07	-0.47	**0.83**				
Perceived Ease of Use	0.91	0.83	0.41	-0.04	-0.52	0.71	**0.91**			
Perceived Enjoyment	0.90	0.82	0.58	0.22	-0.26	0.40	0.51	**0.91**		
Perceived Usefulness	0.90	0.83	0.68	0.21	-0.06	0.34	0.25	0.50	**0.91**	
Social Norms	0.88	0.79	0.36	0.34	0.21	0.10	0.01	0.32	0.39	**0.89**

*Diagonal elements in the correlation of constructs matrix are the square root of the average variance extracted (AVE).
For adequate discriminant validity, diagonal elements should be greater than corresponding off-diagonal elements.

Table 5: Study 2 (iPad) Inter-Construct Correlations

	AF	BI	CO	EN	PEOU	NB	PC	PU
AF1	0.85	-0.14	0.14	-0.22	-0.48	0.18	-0.42	-0.06
AF3	0.87	-0.07	0.24	-0.21	-0.47	0.18	-0.39	-0.01
AF5	0.89	-0.14	0.06	-0.21	-0.45	0.20	-0.45	-0.06
AF6	0.85	-0.12	0.09	-0.27	-0.39	0.16	-0.38	-0.07
BI1	-0.12	0.94	0.24	0.58	0.41	0.34	0.37	0.68
BI2	-0.13	0.92	0.26	0.48	0.33	0.33	0.26	0.58
CO12	0.19	0.24	0.92	0.19	-0.10	0.29	0.00	0.20
CO14	0.07	0.25	0.88	0.21	0.04	0.32	0.15	0.18
EN3	-0.14	0.51	0.20	0.89	0.31	0.39	0.24	0.49
EN4	-0.32	0.54	0.20	0.92	0.59	0.20	0.47	0.43
PEOU3	-0.48	0.40	-0.02	0.52	0.92	-0.01	0.67	0.23
PEOU4	-0.47	0.34	-0.05	0.41	0.90	0.03	0.63	0.23
NB1	0.20	0.30	0.31	0.28	0.01	0.89	0.09	0.33
NB4	0.17	0.34	0.29	0.29	0.01	0.89	0.08	0.37
PC3	-0.35	0.32	0.11	0.31	0.58	0.11	0.82	0.26
PC4	-0.43	0.25	0.01	0.35	0.59	0.05	0.83	0.30
PU3	0.05	0.61	0.28	0.44	0.16	0.42	0.29	0.90
PU5	-0.15	0.63	0.11	0.48	0.29	0.30	0.32	0.91

AF = Perceived Anxiety/Fear BI = Behavioral Intention
CO = Commitment EN = Perceived Enjoyment
PEOU = Perceived Ease of Use NB = Social Norms
PC = Perceived Control PU = Perceived Usefulness

Table 6: Study 2 (iPad) PLS Confirmatory Factor Analysis

Model Testing: Study 2 (iPad)

The same PLS path analysis and T-statistics were used to evaluate the proposed research model and the relationships among the constructs as with study 1. Table 7 shows the overall results of the study. The model presents a 56% of explaining variance in a user's behavioral intention, which in general exceeded the results of previous user technology acceptance and use research. Three constructs, perceived usefulness, perceived ease of use, and perceived anxiety/fear, have supported the hypothesized relationships to a user's behavioral intention, but not the construct of perceived enjoyment. 15% explaining variance of perceived usefulness was presented by the supported constructs of commitment and perceived control, but not from the construct of perceived ease of use. 51% explaining variance of perceived ease of use was presented by the supported construct of perceived control, but not from the construct of commitment. 31% explaining variance of perceived anxiety/fear was supported by the construct of perceived ease of use with a high (-0.518) effect and social norms, but not by the construct of perceived usefulness. 44% explaining variance of perceived enjoyment was supported by all three constructs, perceived usefulness, perceived ease of use, and social norms.

Dependent Variable	Independent Variable(s)	R^2	β	Hypothesis Supported
Behavioral Intention		0.56		
	Perceived Usefulness (PU)		0.52***	Yes
	Perceived Ease of Use (PEOU)		0.18**	Yes
	Perceived Enjoyment (EN)		0.24	No
	Perceived Anxiety/Fear (AF)		0.05***	Yes
Perceived Usefulness		0.15		
	Commitment (CO)		0.19*	Yes
	Perceived Control (PC)		0.28***	Yes
	Perceived Ease of Use (PEOU)		0.07	No
Perceived Ease of Use		0.51		
	Commitment (CO)		-0.10	No
	Perceived Control (PC)		0.72***	Yes
Perceived Anxiety/Fear		0.31		
	Perceived Usefulness (PU)		-0.01	No
	Perceived Ease of Use (PEOU)		-0.52***	Yes
	Social Norms (NB)		0.21**	Yes
Perceived Enjoyment		0.44		
	Perceived Usefulness (PU)		0.32***	Yes
	Perceived Ease of Use (PEOU)		0.43***	Yes
	Social Norms (NB)		0.19**	Yes

* Significant is at 0.1
** Significant is at 0.05
*** Significant is at 0.01

Table 7: Study 2 (iPad) Results

Reliability and Validity Assessments: Study 3 (SAP)

Using the same evaluation processes as in study 1, the reliability (internal consistency) of study 3 (SAP), the composite reliability (Table 8) of all eights constructs ranged from 0.70 to 0.93, which are above the 0.70 recommended level (Fornell and Larcker, 1981). AVE (Table 8) indices ranged from 0.54 to 0.85, which are above the 0.50 recommended level. Loadings (Table 8) from our confirmatory factor analysis table ranged from 0.76 to 0.96 (except item (CO12), which is 0.57 < 0.70). To be consistently compare all four technologies, we extracted the same measuring items for each construct, therefore the low loading of this particular item may due to the unified item processing), which are above the 0.70 recommended level, and they did not cross-load on other constructs. Both results satisfied convergent validity. To assess the discriminant validity, we examined the square root of the average variance extracted (AVE), which should be greater than any of the inter-construct, and indicators' loadings should be stronger than other indicators of other constructs' loadings (Chin, 1998). All eight constructs satisfied these two criteria, loadings from each construct are greater loadings of other constructs and the square root of AVE of each construct (bold values on the diagonal of Table 8) is larger than its correlation with other constructs, and the condition of cross loadings is also satisfied (except item (CO12) (Table 9).

	Composite Reliability	AVE	Behavioral Intention	Commitment	Perceived Anxiety/Fear	Perceived Control	Perceived Ease of Use	Perceived Enjoyment	Perceived Usefulness	Social Norms
Behavioral Intention	0.92	0.85	**0.92**							
Commitment	0.70	0.54	0.24	**0.73**						
Perceived Anxiety/Fear	0.93	0.76	-0.30	0.03	**0.87**					
Perceived Control	0.81	0.68	0.42	0.24	-0.43	**0.82**				
Perceived Ease of Use	0.87	0.77	0.32	0.10	-0.49	0.67	**0.87**			
Perceived Enjoyment	0.92	0.85	0.61	0.13	-0.32	0.42	0.35	**0.92**		
Perceived Usefulness	0.92	0.85	0.70	0.24	-0.34	0.53	0.39	0.53	**0.92**	
Social Norms	0.79	0.65	0.56	0.18	-0.14	0.32	0.22	0.47	0.51	**0.81**

*Diagonal elements in the correlation of constructs matrix are the square root of the average variance extracted (AVE).
For adequate discriminant validity, diagonal elements should be greater than corresponding off-diagonal elements.

Table 8: Study 3 (SAP) Inter-Construct Correlations

	AF	BI	CO	EN	PEOU	NB	PC	PU
AF1	0.92	-0.33	0.12	-0.36	-0.46	-0.19	-0.40	-0.33
AF3	0.90	-0.35	-0.05	-0.31	-0.50	-0.05	-0.43	-0.36
AF5	0.79	-0.12	-0.01	-0.14	-0.32	-0.13	-0.27	-0.22
AF6	0.88	-0.18	0.06	-0.25	-0.39	-0.12	-0.33	-0.24
BI1	-0.28	0.92	0.21	0.58	0.28	0.52	0.38	0.65
BI2	-0.28	0.92	0.24	0.55	0.31	0.52	0.39	0.65
CO12	-0.04	0.21	0.57	0.04	0.03	0.07	0.03	0.14
CO14	0.06	0.16	0.86	0.13	0.10	0.17	0.28	0.20
EN3	-0.30	0.57	0.16	0.92	0.32	0.44	0.39	0.49
EN4	-0.29	0.56	0.07	0.92	0.32	0.43	0.38	0.49
PEOU3	-0.42	0.33	0.08	0.32	0.91	0.27	0.69	0.41
PEOU4	-0.45	0.22	0.10	0.29	0.84	0.10	0.46	0.26
NB1	-0.08	0.47	0.02	0.44	0.29	0.86	0.26	0.42
NB4	-0.15	0.45	0.31	0.31	0.05	0.76	0.27	0.41
PC3	-0.39	0.29	0.26	0.24	0.47	0.20	0.76	0.36
PC4	-0.32	0.39	0.16	0.43	0.63	0.32	0.88	0.50
PU3	-0.30	0.63	0.30	0.44	0.37	0.45	0.52	0.92
PU5	-0.33	0.68	0.14	0.54	0.35	0.49	0.46	0.93

AF = Perceived Anxiety/Fear
BI = Behavioral Intention
CO = Commitment
EN = Perceived Enjoyment
PEOU = Perceived Ease of Use
NB = Social Norms
PC = Perceived Control
PU = Perceived Usefulness

Table 9: Study 3 (SAP) PLS Confirmatory Factor Analysis

Model Testing: Study 3 (SAP)

The same PLS path analysis and T-statistics were used to evaluate the proposed research model and the relationships among the constructs. Table 10 shows the overall results of the study. The model presents a 57% of explaining variance in a user's behavioral intention, which in general exceeded the results of previous user technology acceptance and use research. Two constructs, perceived usefulness and perceived enjoyment, have supported the hypothesized relationships to a user's behavioral intention, but not the constructs of perceived ease of use and perceived anxiety/fear. 30% explaining variance of perceived usefulness was presented by the supported construct of perceived control, but not from the construct of commitment and perceived ease of use. 46% explaining variance of perceived ease of use was presented by the supported construct of perceived control, but not from the construct of commitment. 27% explaining variance of perceived anxiety/fear was supported by the construct of perceived usefulness and perceived ease of use, but not by the construct of social norms. 36% explaining variance of perceived enjoyment was supported by all three constructs, perceived usefulness and social norms, but not perceived ease of use.

Dependent Variable	Independent Variable(s)	R^2	β	Hypothesis Supported
Behavioral Intention		0.57		
	Perceived Usefulness (PU)		0.53***	Yes
	Perceived Ease of Use (PEOU)		-0.01	No
	Perceived Enjoyment (EN)		0.33***	Yes
	Perceived Anxiety/Fear (AF)		-0.03	No
Perceived Usefulness		0.30		
	Commitment (CO)		0.24	No
	Perceived Control (PC)		0.43***	Yes
	Perceived Ease of Use (PEOU)		0.08	No
Perceived Ease of Use		0.46		
	Commitment (CO)		-0.07	No
	Perceived Control (PC)		0.69***	Yes
Perceived Anxiety/Fear		0.27		
	Perceived Usefulness (PU)		-0.21***	Yes
	Perceived Ease of Use (PEOU)		-0.43**	Yes
	Social Norms (NB)		0.06	No
Perceived Enjoyment		0.36		
	Perceived Usefulness (PU)		0.33***	Yes
	Perceived Ease of Use (PEOU)		0.16	No
	Social Norms (NB)		0.27**	Yes

* Significant is at 0.1
** Significant is at 0.05
*** Significant is at 0.01

Table 10: Study 3 (SAP) Results

Reliability and Validity Assessments: Study 4 (smartphone)

Using the same evaluation processes as in study 1, the reliability (internal consistency) of study 2 (iPad), the composite reliability (Table 12) of five constructs ranged from 0.79 to 0.95, which are above the 0.70 recommended level (Fornell and Larcker, 1981), but three constructs were below 0.70 threshold (commitment = 0.63, perceived anxiety/fear = 0.65, and social norms = 0.67). AVE (Table 11) indices of all eight constructs ranged from 0.63 to 0.90, which are above the 0.50 recommended level. Loadings (Table 12) from our confirmatory factor analysis table ranged from 0.75 to 0.95 (but CO12 = 0.64 < 0.70), which all are above the 0.70 recommended level, and they did not cross-load on other constructs. Both results satisfied convergent validity. To assess the discriminant validity, we examined the square root of the average variance extracted (AVE), which should be greater than any of the inter-construct, and indicators' loadings should be stronger than other indicators of other constructs' loadings (Chin, 1998). All eight constructs satisfied these two criteria, loadings from each construct are greater loadings of other constructs and the square root of AVE of each construct (bold values on the diagonal of Table 11) is larger than its correlation with other constructs, and the condition of cross loadings is also satisfied (Table 12).

	Composite Reliability	AVE	Behavioral Intention	Commitment	Perceived Anxiety/Fear	Perceived Control	Perceived Ease of Use	Perceived Enjoyment	Perceived Usefulness	Social Norms
Behavioral Intention	0.95	0.90	**0.95**							
Commitment	0.63	0.63	0.39	**0.79**						
Perceived Anxiety/Fear	0.65	0.65	-0.49	-0.16	**0.81**					
Perceived Control	0.79	0.79	0.55	0.26	-0.42	**0.89**				
Perceived Ease of Use	0.79	0.79	0.71	0.24	-0.53	0.72	**0.89**			
Perceived Enjoyment	0.82	0.82	0.72	0.42	-0.48	0.53	0.57	**0.91**		
Perceived Usefulness	0.79	0.79	0.64	0.42	-0.38	0.51	0.56	0.70	**0.89**	
Social Norms	0.67	0.67	0.38	0.31	-0.11	0.30	0.33	0.42	0.51	**0.82**

*Diagonal elements in the correlation of constructs matrix are the square root of the average variance extracted (AVE).
For adequate discriminant validity, diagonal elements should be greater than corresponding off-diagonal elements.

Table 11: Study 4 (Smartphone) Inter-Construct Correlations

	AF	BI	CO	EN	PEOU	NB	PC	PU
AF1	0.75	-0.31	-0.13	-0.31	-0.24	0.01	-0.20	-0.20
AF3	0.76	-0.34	-0.10	-0.30	-0.37	-0.12	-0.36	-0.36
AF5	0.89	-0.43	-0.13	-0.42	-0.50	-0.03	-0.35	-0.25
AF6	0.82	-0.46	-0.15	-0.47	-0.53	-0.17	-0.41	-0.40
BI1	-0.47	0.95	0.33	0.70	0.65	0.33	0.54	0.60
BI2	-0.45	0.95	0.41	0.66	0.68	0.39	0.49	0.61
CO12	0.02	0.23	0.64	0.22	0.14	0.30	0.18	0.20
CO14	-0.21	0.37	0.92	0.41	0.22	0.23	0.23	0.43
EN3	-0.36	0.61	0.39	0.90	0.48	0.31	0.43	0.65
EN4	-0.50	0.68	0.37	0.91	0.54	0.46	0.52	0.61
PEOU3	-0.46	0.78	0.29	0.58	0.91	0.35	0.57	0.57
PEOU4	-0.48	0.45	0.11	0.42	0.87	0.22	0.72	0.41
NB1	-0.16	0.37	0.28	0.37	0.35	0.86	0.33	0.44
NB4	0.00	0.24	0.22	0.32	0.17	0.77	0.13	0.39
PC3	-0.43	0.48	0.25	0.49	0.62	0.19	0.87	0.38
PC4	-0.33	0.49	0.21	0.46	0.65	0.33	0.90	0.51
PU3	-0.29	0.51	0.41	0.54	0.47	0.49	0.43	0.87
PU5	-0.39	0.62	0.36	0.69	0.52	0.43	0.47	0.91

AF = Perceived Anxiety/Fear
BI = Behavioral Intention
CO = Commitment
EN = Perceived Enjoyment
PEOU = Perceived Ease of Use
NB = Social Norms
PC = Perceived Control
PU = Perceived Usefulness

Table 12: Study 4 (Smartphone) PLS Confirmatory Factor Analysis

Model Testing: Study 4 (smartphone)

The same PLS path analysis and T-statistics were used to evaluate the proposed research model and the relationships among the constructs. Table 13 shows the overall results of the study. The model presents a 66% of explaining variance in a user's behavioral intention, which in general exceeded the results of previous user technology acceptance and use research. Two constructs, perceived ease of use and perceived enjoyment, have supported the hypothesized relationships to a user's behavioral intention, but not the constructs of perceived usefulness and perceived anxiety/fear. 43% explaining variance of perceived usefulness was presented by the supported constructs of perceived control, commitment and perceived ease of use. 64% explaining variance of perceived ease of use was presented by the supported construct of perceived control, but not from the construct of commitment. 34% explaining variance of perceived anxiety/fear was supported by the construct of perceived usefulness and perceived ease of use, but not by the construct of social norms. 54% explaining variance of perceived enjoyment was supported by all three constructs, perceived usefulness and perceived ease of use, but not social norms.

Dependent Variables	Independent Variable(s)	R^2	β	Hypothesis Supported
Behavioral Intention		0.66		
	Perceived Usefulness (PU)		0.14	No
	Perceived Ease of Use (PEOU)		0.38**	Yes
	Perceived Enjoyment (EN)		0.37***	Yes
	Perceived Anxiety/Fear (AF)		-0.07	No
Perceived Usefulness		0.43		
	Commitment (CO)		0.27*	Yes
	Perceived Control (PC)		0.27***	Yes
	Perceived Ease of Use (PEOU)		0.28*	Yes
Perceived Ease of Use		0.64		
	Commitment (CO)		-0.02	No
	Perceived Control (PC)		0.81***	Yes
Perceived Anxiety/Fear		0.34		
	Perceived Usefulness (PU)		-0.23*	Yes
	Perceived Ease of Use (PEOU)		-0.48***	Yes
	Social Norms (NB)		0.16	No
Perceived Enjoyment		0.54		
	Perceived Usefulness (PU)		0.51***	Yes
	Perceived Ease of Use (PEOU)		0.26***	Yes
	Social Norms (NB)		0.08	No

* Significant at 0.1
** Significant is at 0.05
*** Significant is at 0.01

Table 13: Study 4 (Smartphone) Results

1.5 Discussion and Implications

Discussion

Why people do things the way they do is a fundamental and daunting question in behavioral research. We set out to investigate and look for patterns in commonality among differences of which human's capacity of inheritance and/or learning, and this investigation is both exhilarating and exhausting. Lazarus and Folkman's Cognitive Appraisal Theory of Emotion (1984) has formed the foundation and background reasoning support for our comprehensive research model. The Appraisal Theory supplied additional personal and emotional factors to complement cognition factors in the search for knowledge and understanding of one's technology use. In all, our empirical study results have provided an extended explanatory power on how appraisals and emotions interplayed with cognition, in terms of research in behavioral intention to use technology. Overall the explanatory variance (R^2) ranged from 56 to 66 percent (Table 13), which exceeded previous technology use studies. The Microsoft Access (study 1) and SAP (study 3) were categorized as utility-oriented technologies, versus iPad and smartphone as pleasure-oriented technologies. We found that the construct of perceived enjoyment had a significant impact on the behavioral intention to use on technologies (Access, SAP, and smartphone), but not on the iPad, and the construct of perceived anxiety/fear has a significant impact on the iPad, but not on technologies like Microsoft Access, SAP, and smartphone. We rationalize that when a person knows that he or she has to use a technology for work, e.g., a database system (Access), an enterprise resource planning (SAP) system, or a smartphone; the fun or positive emotional factor will greatly impact on his or her intention. In other words, when a worker has to use a company's technology to do his or her job, the more fun/positive factor embedded in that technology, the more a worker will intend to use it. When a

person knows a (utility type) technology is for work, he/she would assume that that particular technology is not for fun. Therefore, if that technology has positive emotional factor (perceived enjoyment) in it, it will greatly impact his or her behavioral intention. But when a person knows a (pleasure-oriented) technology is for fun/pleasure, any negative emotional factor will be more critical to impact his or he behavioral intentions.

The construct of perceived control has been a significant antecedent of cognition factors, perceived usefulness and perceived ease of use, throughout all four technologies. The results told us that no matter what type of technology is approached, perceived control is a significant antecedent for both cognition factors (perceived usefulness and perceived ease of use from TAM). However, the construct of commitment was not found to impact the cognition factors on three technologies (Access, SAP, and smartphone), but only on iPad. We suspect that utility-oriented technologies usually are provided by the company, to which a user does not feel the need to commit. On the other hand, an iPad is an expensive technology, which requires a certain degree of commitment for a user. Smartphone technology updates rapidly, so even among hardcore iPhone users, it is hard for to feel a true sense of long-term commitment.

The construct of perceived ease of use had a significant impact on perceived anxiety/fear, and the construct of perceived usefulness had a significant impact on perceived enjoyment to all four technologies, which indicated that when a person perceived a technology is easy to use, it reduced a user's anxiety/fear. And when a person perceived a technology to be useful, it may coincide with positive emotion, such as perceived enjoyment. However, the relationship between perceived usefulness and perceived anxiety/fear were mixed and inconclusive. The same inconclusive results on the relationship between perceived ease of use and perceived enjoyment

were found. The construct of social norms had a meaningful impact on a user's perceived enjoyment, but not on perceived anxiety/fear, which may require further investigation.

Dependent Variable	Independent Variable(s)	Hypotheses			
		Access	SAP	iPad	Smartphone
Behavioral Intention	R^2	0.63	0.57	0.56	0.66
	Perceived Usefulness (PU)	Yes	Yes	Yes	No
	Perceived Ease of Use (PEOU)	Yes	No	Yes	Yes
	Perceived Enjoyment (EN)	Yes	Yes	No	Yes
	Perceived Anxiety/Fear (AF)	No	No	Yes	No
Perceived Usefulness	R^2	0.32	0.30	0.15	0.43
	Commitment (CO)	No	No	Yes	Yes
	Perceived Control (PC)	Yes	Yes	Yes	Yes
	Perceived Ease of Use (PEOU)	Yes	No	No	Yes
Perceived Ease of Use	R^2	0.47	0.46	0.51	0.64
	Commitment (CO)	No	No	No	No
	Perceived Control (PC)	Yes	Yes	Yes	Yes
Perceived Anxiety/Fear	R^2	0.26	0.27	0.31	0.34
	Perceived Usefulness (PU)	No	Yes	No	Yes
	Perceived Ease of Use (PEOU)	Yes	Yes	Yes	Yes
	Social Norms (NB)	No	No	Yes	No
Perceived Enjoyment	R^2	0.42	0.36	0.44	0.54
	Perceived Usefulness (PU)	Yes	Yes	Yes	Yes
	Perceived Ease of Use (PEOU)	Yes	No	Yes	Yes
	Social Norms (NB)	Yes	Yes	Yes	No
Yes: Hypothesis is supported No: Hypothesis is not supported					

Table 14: Four Models Hypotheses Comparisons

Implications for Research

Our study has shown numbers of compelling implications for both research and practice. Historically, research on the subject of technology acceptance and use has been anchored in the user's cognitive responses. We believe that one's emotions cannot be set aside while studying behavioral intentions and actions. Emotions are critical for better understanding of technology user's perceptions and the impact from the interplay of the relationship with cognition. Despite the fact that emotion has been a dynamic research topic for years, because of its nature of ambiguity and equivocality, theoretical research in emotion is still ongoing.

We believe that user emotional factors and their impact are under researched, and we have demonstrated and proposed a theoretical model to illustrate the role of emotion and the relationship with cognition. In search for explaining and/or predicting a person's behavior, in terms of why people do the things they do, we tackle psychology and neuroscience research areas to derive theories and studies to build the foundations of our research model, and hope to expand our knowledge base particularly related to user's behavior on acceptance and adoption of a new information technologies. We believe that other than a person's cognition, emotions play a determinant role in his/her behavioral intentions and subsequent behaviors.

Implications for Practice

Our research results have raised awareness that user's emotional factors should be integrated into any technology design and development. Technology does not use itself, humans do. In 2001, commentators of Information Systems Research, Orilowski and Iacono stated that in the field of IS research "has not deeply engaged in its core subject matter-information technology (IT) artifact." The idea was echoed by scholars (Benbasat and Zmud, 2003; Whinston and Geng, 2004) in that IT research should have so-to-speak tangible technological features, which would

be accountable for the substance of IT research. The successful example of popular iPhone/iPad products set forth the value of user's emotional factors in a technology's acceptance. By identifying emotional factors and verifying the importance of relationships between emotion and cognition in our study, technology designers should be aware of and integrate emotion considerations into the design.

1.6 Limitations and Future Directions

Limitations

Behavioral research is inherently challenging because of the ambiguity, unpredictability, and differences in human behaviors. The first challenge was that our proposed constructs, such as emotions, belief systems, personal factors, and social factors are all ambiguous and still under debate. They are inherently complex, rich, interrelated, and hard to define into unified and integrated constructs. In this study, emotion has yet yielded a concrete, consensual, and measurable definition; nevertheless, we cannot overlook the effect and determination of emotion in guiding and detecting our behaviors. Belief systems are another hurdle to objectively define that Lazarus and Folkman (1984) said that "belief systems are too complex, rich, and contradictory to be massed into a simple unidimensional concept" (p.68). Another challenge is the on-going debate on the relationship between cognition and emotion. Previous technology use research models and theories have predominately assumed that either emotion was not considered or emotion is an antecedent of cognition. We have no doubt that both cognition and emotion coexist and both affect our thinking and feeling and the end result of those two elements regulates our behaviors. One cannot isolate one from the other when a person is facing a situation where technology behavioral intention to use is under study. Despite the debate on which factor influences which, we followed Lazarus and Folkman's Appraisal Theory stream

that cognition is an antecedent of emotion, that emotions are the product of cognitive evaluation and responses. These characteristics of the constructs and relationships among appraisal, emotions, cognition, and behavioral intention also make our studies more intriguing.

Like any self-reported research survey, our online survey has its shortcomings. We can never be 100 percent certain that our survey participants have answered and weighed each and every question truthfully and accurately. Those shortcomings should not significantly tarnish our findings.

Another challenge is the barrier of language. Can a specific word fully describe or measure a person's emotion? For instance, the word "enjoyable" describing an emotion may mean different things or be weighted differently to different people. Another issue is that so far, emotion theorists have not been able to agree on whether emotion is an independent variable, or an antecedent of cognition, or a product of cognition. We deduced that emotion is a product of cognitive evaluation throughout the study. Third, we applied two general dimensions of emotion (positive and negative) and operationalized negative emotion in perceived anxiety/fear and positive emotion in perceived enjoyment. By doing so, we might have overgeneralized the scope of emotion, which may have narrowed the generalizability of our study. Later, we could test on more specific emotions in our future studies.

Another limitation is that we did not calculate the effect size. Our sample size for each study group was at around 100 to 150, which was not large enough to pose a false statistical significance. Nevertheless, we believe that our hypothesis testing results have supported the data analysis in this study.

Future Directions

Emotion has possessed a potential and underlying power to impact and/or direct our intentions and behaviors, and it should not be ignored or excluded from technology acceptance and use research. The limitation of defining emotion should not limit researchers from continuing looking into why, what, and how emotion interplays with cognition. We need to further our research to understand why cognitive evaluation causes certain emotional responses, what emotional responses would do to a person's behavioral intention, and how. If information technology is a product or a service, we should integrate or incorporate positive emotional factor into it to enhance its usability and maximize productivity, and limit or eliminate negative emotional factor as well.

We conducted a study, which tested on four different technologies, and have found compelling results that those emotional factors contributed the explanatory power of our extended technology use model. Appraisal Theory has laid out a prevailing theoretical background for our constructs and relationship building. The reality is that human beings are intelligent and adaptable; we survey, assess, evaluate, and appraise our surroundings and come up with potential outcomes, which may be beneficial, indifferent, or harmful. Depending on the appraised possible outcome, both our cognition and emotion are at work to reach or attempt to achieve a goal. Our study results showed that while emotion is acting as a mediating factor between cognition and behavioral intention, the predictive variances have increased through all four technologies.

II. CHAPTER 2: CULTURAL, EMOTIONAL, AND COGNITIVE EFFECTS ON TECHNOLOGY USE

2.1 Introduction

Enterprise Resource Planning (ERP) systems have provided an integral tool for both the organization and end users, which utilizes an organizational database to solve the issues of inter-organizational information silos, to embed industry best-practice business processes, and to streamline organizational operations and tasks. As ERP systems gained popularity among the larger organizations, it was found that the success of a new ERP implementation may make or break the entire operation of a company; the negative impact may be even more severe for a multinational corporation. According to a *2015 ERP report*[2], of 562 international ERP implementations, average costs have gone up from $2.8M in 2014 to $4.5M in 2015 and failure rates have increased from 16% in 2014 to 21% in 2015. Information technology projects have failed and often have cost organizations tremendous financial resources and manpower. The present study is aimed at investigating factors, which may contribute to and determine more predictable and desirable IT project implementation outcomes. There are numbers of failures in enterprise resource planning (ERP) implementations which have caused multinational corporations tremendous financial and productivity losses in recent years. According to CIO magazine, Hershey's 1999 ERP/SAP project disaster cost the company $100 million and resulted in many unhappy shareholders. Similar ERP disasters include Nike's $100 million loss in sales and 20% drop of its stock price in the year 2000, and Hewlett-Packard's $160 million in order backlog and revenue loss in 2004 (Koch, 2004). However, the use of enterprise software, such as

[2] See: http://panorama-consulting.com/key-findings-from-the-2015-erp-report/, viewed 2016

SAP in Enterprise Resource Planning (ERP), has been criticized for being complex and user unfriendly (Finney and Corbett 2007; Gargeya and Bradly 2005; Kim, Lee, and Gosain 2005; Nah and Delgado 2006; Nah, Zuckweiler, and Lau 2003; Soja 2006). The failed or less-than-satisfactory implementations have caused user/employees' disgruntlement and resistance to the new enterprise software, and have resulted ultimately in diminished productivity for companies (Aral, Brynjolfsson, and Wu, 2006; Davenport, 1998).

There are many possible factors, such as technical, legal, and human issues, contributing to the fallout of an ERP project. In our study, we specifically looked at the understanding workers' behaviors in adoption and use of a new technology at an organizational level; we felt this to be both crucial and challenging to the success of a new technology implementation. Prior studies on technology acceptance have been mainly focused on the technology acceptance model (TAM). What are the other factors that impact an office worker's cognition while using ERP? We posit using the Technology Acceptance Model (TAM) by Davis (1989) as a theoretical framework and a cognitive response component, and extend emotional and cultural factors in our proposed research model. Multinational companies need to address the issue of the cultural differences of their employees/users, because those differences can make or break a new enterprise software implementation. Studies have shown that cultural differences have played an important role on a worker's technology use (Geertz 1975; Markus and Kitayama 1991; Sampson 1988; Shweder and LeVine 1984). However, when considering the globalization of technology, there is a gap in the research. Cultural differences are a distinct factor on further investigating technology acceptance. The Western view of the individual is as an independent, self-contained, and autonomous entity. On the other hand, the Asian, Latin-American, African, and southern European view of an individual is as an interdependent being (Hofstede, 1998).

There has been limited research on the impact of user's emotions on new technology acceptance, let alone in a cross-cultural setting. Based on the Theory of Reasoned Action (TRA) and TAM, we propose a research model which would demonstrate the relationship between the cultural factors and subjective norms. Through the findings, we would contribute to the body of knowledge of technology acceptance in a global domain.

The research question is that beside a user's cognitive response, how would cross-cultural differences and emotions impact a person's technology use? This study investigates individual-level cultural orientation, social norms, emotional factors (in a general dimension term, positive vs. negative emotion), and cognition in the context of the use of SAP (an ERP system). The two core constructs of a user's cognition are derived from TAM; perceived usefulness (PU) and perceived ease of use (PEU). While Davis's TAM has minimized the role of personal factors; however, we believe that, based on the characteristics of a new information technology and the circumstances, personal factors would have an influential impact on a person's cognition and emotions. Specifically, we are investigating the role of culture impacting both one's emotion and cognition. The contributions of this study will shed light on discovering and cultivating additional knowledge in a user's conflict in using new enterprise software, thus enhancing a better understanding for professionals when implementing ERP systems.

2.2 Theoretic Background and Hypotheses Development

Culture

Many have defined culture in a collective and integral term: "Culture refers to the cumulative deposit of knowledge, experience, beliefs, values, attitudes, meanings, hierarchies, religion, notions of time, roles, spatial relations, concepts of the universe, and material objects and possessions acquired by a group of people in the course of generations through individual

and collective efforts" (Osojnik, 2011, p. 2). Furthermore, Hofstede et al (1991) defined culture as "the collective programming of the mind distinguishing the members of one group or category of people from another" (p. 3). What has culture to do with behaviors? Specifically, in our present study, how would culture affect human's technology use behavior? Research in various disciplines has been conducted, in the hope to come to a conclusion as to what culture is and how culture affects human behaviors. But none has succeeded. Nevertheless, a general consensus is that culture has a profound impact on how humans behave. When iPhone 5c and 5s went on sale on September 20, 2013, 9 million new iPhones were sold out over the weekend. The iPhone 5s came with a gold colored casing option. The iPhone 5c did not have a gold colored casing option but was less expensive than the 5s. Some customers complained that they did not get the gold colored iPhone 5s they wanted. One Chinese customer commented "I don't care what's inside the device" "Chinese like gold".[3] Who knew that a color could have dominated the sale of a fairly expensive iPhone? Another report was that "9 in 10 in China bought iPhone 5s instead of 5c.[4] What is culture? The subject of culture has been long studied in vast areas, anthropology, sociology, behavioral psychology, etc. Culture seems to be a concept/idea, which can be easily and intuitively recognized. People acknowledge the existence of cultural differences, and we know that people from different cultures do and react to things differently. However, up until now, researchers from different disciplines have disagreed on what culture is and is not. There are various studies on the concept of culture, which has been defined ideally and explicitly as ideologies, collective will, values, norms and practices, rituals, and myths (DeLong and Fahey, 2000; Hofstede, 1998; Kroeber and Kluckhohn, 1952; Markus and Kitayama, 1991).

---

[3] See (viewed on Sept, 26, 2013) http://online.wsj.com/article/SB10001424127887324492604579086982824900624.html?KEYWORDS=apple

[4] See (viewed on Sept, 26, 2013) http://www.zdnet.com/cn/9-in-10-in-china-bought-iphone-5s-instead-of-5c-7000021141/

Nevertheless, Hofstede's (1998) cultural dimensions (individualism/collectivism, power distance, uncertainty avoidance, and masculinity/femininity), though controversial because Hofstede assumed that national culture is a uniform culture and in addition, his surveys and findings were collected and based on one single cooperation (IBM), which were criticized of being an occupational culture but not a national culture, have been a seminal, valid, and widely recognized measurement of national culture. Despite the lack of consensus of culture, studies showed that cultural differences have a significant impact on how people perceive and behave.

There have been well known and accepted theories studying IT/IS acceptance. The Theory of Reasoned Action (TRA) (Fishbein and Ajzen, 1975) from social psychology has spurred some influential research theories, which have been applied to IS research. The Technology Acceptance Model (TAM) by Davis (1989) has been widely used to investigate the adoption of information systems/technologies. Ajzen (1991) extended TRA and came up with the Theory of Planned Behavior (TPB), to better explain and predict humans' behavioral intention to action. TAM and TPB have both enhanced our understanding of the acceptance and usage of information systems/technologies. However, based on our observations, most of the research on IS/IT adoption and acceptance have used students as the primary research participants.

Furthermore, two constructs (attitude and subjective norms) from TRA were eliminated in the development of TAM. We suggest that when conducting cross-cultural research in IS/IT acceptance and adoption, TAM may not be sufficient to investigate the phenomenon. The Theory of Reasoned Action (TRA) (Fishbein and Ajzen, 1975) suggests that if a person intends to do a certain action, he more than likely will do it. There are two elements that influence a

person's intention: attitude and subjective norms. Attitude predicts a person's voluntary behavior; it is this person's own opinions. Subjective norms represent how a person thinks other people will view him or her if he or she acts on that behavior; it is opinion of other people whom this person cares about. The dimensions of national culture in this study relate to attitude and subjective norms because, in terms of technology acceptance, what other people's opinions are may have played a significant role in a person's decision, and cultural differences may influence the degree of how much of other people's opinion a decider takes into account. We suggest that the construct of subjective norms has played an important role impacting how people view and accept a new technology because of subjective norms. As previous studies on subjective norms did not separate superior and peer groups (Teo, Tan, Cheah, Ooi, and Yew, 2012; Ybarra and Trafimow, 1998), we would like to find out the difference of the influences from their peers and/or superiors. This differentiation will benefit researcher and practitioners.

Hofstede's Four Dimensions of Culture

Leidner and Kayworth (2006) stated that "culture is a challenging variable to research, in part because of the multiple divergent definitions and measures of culture" (p. 357). Kroeber and Kluckhohn (1952), for example, identified 164 definitions of culture. Of all the definitions of culture, Hofstede's (1998) four dimensions of culture are the most respected and widely used. He developed the four dimensions of culture: individualism/collectivism, uncertainty avoidance, power distance, and masculinity/femininity. Individualism describing a society in which "the ties between individuals are loose" (Hofstede, 2001, p. 225) means that a person puts his or her needs above anyone else. Collectivism means that a person acts as a member of a group and puts the needs of the group ahead of his or her needs. Uncertainty avoidance means the extent to which a person feels "threatened by uncertain or unknown situation" (Hofstede, 2001, p. 161). Leidner

and Kayworth (2006) define uncertainty avoidance as “the degree to which members of a society feel comfortable with uncertainty and ambiguity. Members in “high uncertainty avoidance countries prefer less ambiguity than do those in low uncertainty avoidance countries” (p. 361). In other words, it is a degree of how comfortable a person feels about uncertainty or ambiguity. Power distance stands for that level at which less powerful members in an institution and organization would expect and “accept unequal power distribution” (Hofstede, 2001, p. 82). In a high power distance society, people expect and accept the imbalance of “power” or authority. For example, people will expect and accept that a manager has high power over subordinates or school teachers over students. Masculinity/Femininity describes that “a society in which social gender roles are clearly distinct: men are supposed to be assertive, tough, and focused on material success; women are supposed to be more modest, tender, and concerned with the quality of life” (Hofstede, 2001, p. 297). In a distinct gender role society, men and women are expected to act on certain roles and perform different tasks separately.

Throughout the sociology, psychology, and consumer behavior research areas, culture has been a prominent factor. Research has shown that culture has a profound effect on a person’s perceptions of online shopping (Cyr, 2008; Cyr and Head, 2013, Srite and Karahanna, 2006). Much like the concept of emotion, we, as humans, know its existence and substantial influences on behaviors, but yet we do not have a definitive way to define and measure it. However difficult the concept of culture may seem, its impact on a human’s behavior should not be neglected. Despite the controversial debates over how valid the measurements of Hofstede’s cultural dimensions are, Leidner and Kayworth’s (2006) review describes more 30 studies from 80 articles that used Hofstede’s four dimensions to measure cultural differences. Therefore, we believe that using Hofstede’s cultural dimensions in this study is appropriate.

“People in different cultures have strikingly different construals of the self, of others, and of the interdependence of the two. These construals can influence, and in many cases determine, the very nature of individual experience, including cognition, emotion, and motivation” (Markus and Kitayama 1991, p. 224). These authors were saying that cultural differences can induce different interpretations of the self, of others, and the interplay and interaction of self and other, and those interpretations can influence or determine one’s cognition, emotions, and motivation.

We hypothesized that the relationships among the factors in our research model based on the cultural factors are dominating antecedent factors, impacting directly and/or indirectly, and consciously and subconsciously a user’s beliefs and emotions. Using Hofstede’s four cultural dimensions as our measuring scales, we expect that a high uncertainty avoidance factor would have a negative impact both on a user’s beliefs (perceived ease of use and perceived usefulness) and positive emotion (perceived enjoyment).

Uncertainty Avoidance

Davis (1989) has defined that perceived usefulness is “the degree to which a person believes that using an IT would enhance his or her job performance" and perceived ease of use as “the degree to which a person believes that using an IT would be free of effort” (p. 320). Both perceptions on a user’s technology acceptance and use have an implication that a positive perception would lead to improve one’s “achievement of work goals and advancement” (Srite and Karahanna, 2006, p. 685). Prior research has found that the uncertainty avoidance cultural factor has shown negative impact on a person’s innovativeness (Shane, 1995; Steenkamp, Hofstede, and Wedel, 1999), information search (Money and Crotts, 2003), Internet shopping (Lim, Leung, Sia, and Lee, 2004), tourist behaviors (Litvin, Crotts, and Hefner, 2004), and a direct influence on perceived usefulness of an ERP (Hwang, 2005). Hofstede et al, (1991)

defines uncertainty avoidance as the extent to which a person feels "threatened by uncertain or unknown situation" (p. 167). Leidner and Kayworth (2006) define uncertainty avoidance as "the degree to which members of a society feel comfortable with uncertainty and ambiguity. Members in high uncertainty avoidance countries prefer less ambiguity than do those in low uncertainty avoidance countries". In other words, it is a degree of how comfortable a person feels about uncertainty or ambiguity. Prior research has shown that high uncertainty avoidance may have played as a deterrent on a customer's perceptions in the service industry (Reimann, Lünemann, and Chase, 2008). The uncertainty avoidance cultural dimension/factor is considered as a deterrent or a negative impact on a person's perception. We suggested that the uncertainty avoidance cultural factor acts as a negative force, which impairs a person's cognitive perceptions (perceived usefulness and perceived ease of use) on technology acceptance and use. Thus:

H1a: A high level of uncertainty avoidance in a user would negatively impact his or her perceived usefulness.
H1b: A high level of uncertainty avoidance in a user would negatively impact his or her perceived ease of use.

According to Lazarus and Foreman's Cognitive Appraisal Theory of Emotion (Appraisal Theory) (1984), they have suggested that cognition is an antecedent of emotions. Jurado, Ludvigson, and Ng (2013) stated that "uncertainty is typically defined as the conditional volatility of a disturbance that is unforeseeable from the perspective of economic agents" (p. 1177). Uncertainty is a product of cognitive processes. While a person is facing an unforeseeable outcome, uncertainty occurs. A person with an uncertainty avoidance cultural characteristic is likely to impact his/her perceptions of emotions. Research in communication has demonstrated a positively correlated relationship between uncertainty and anxiety in that both factors would have negative impact on a person's adaptation (Gao and Gudykunst, 1990) and adjustment (Gudykunst, 1998) to a new culture. Thus, we hypothesize that the uncertainty avoidance cultural

factor would have a negative impact on a person's positive emotional factor (enjoyment) and a positive on a person's negative emotional factor (anxiety).

H1c: A high level of uncertainty avoidance in a user would negatively impact his or her perceived enjoyment.
H1d: A high level of uncertainty avoidance in a user would positively impact his or her perceived anxiety.

Collectivism/Individualism

The individualism cultural factor has been conceptualized as the direct opposite to collectivism (Hui, 1988; Kitayama, Markus, Matsumoto, and Norasakkunkit, 1997). In more individualistic cultures, a person is less concerned with the thoughts and opinions of others and, thus, feels less pressure to conform to any specific behavior. In more collectivistic cultures, where the group tends to be more important than the individual, the person is more likely to be concerned about the thoughts and opinions of others and, thus, more likely to conform to behaviors deemed important to the group (Bandyopadhyay and Martell, 2007).

Collectivism means that a person acts as a member of a group and puts the needs of the group ahead of his or her own needs. Research has shown that a collectivist culture has a profound impact on employees' performance and productivity. McCoy, Galletta, and King (2007) stated that "the level of individualism/collectivism affects the degree to which employees comply with organizational requirements" (p. 84), and "In collectivist cultures, higher importance is placed on belonging to the organization. A collectivist is heavily influenced by the group and will pay more attention to the opinions of others than will an individualist, mainly because of a need to gain approval from the group" (p. 84). Parsons and Shills (1951) described that individualism is a character that an individualist is self-interested. Other researchers (Earley, 1989; Wagner and Moch, 1986) have developed a similar notion that an individualist regards his/her own interests above others, and acts on satisfying his/her personal objectives. We

consider that the emphasis of "self-interest" in individualism enhances a person's perception and positive emotions. Davis (1989, p. 320) defined perceived usefulness as "the degree to which a person believes that using an IT would enhance his or her job performance" and perceived ease of use as "the degree to which a person believes that using an IT would be free of effort" that we believe when a user has a high degree of individualism (high self), this would highlight the importance of his/her perception on using an IT to enhance his or her job performance. Thus:

H2a: A high level of individualism (low collectivism) in a user would positively impact his or her perceived usefulness.
H2b: A high level of individualism (low collectivism) in a user would positively impact his or her perceived ease of use.

Venkatesh (2000) defined the concept of perceived enjoyment as "the activity of using an IT is perceived to be enjoyable in its own right, aside from any performance consequences resulting from system use" and of perceived anxiety as "the degree of an individual's apprehension, or even fear, when she/he is faced with the possibility of using an IT". Research (Basabe, Paez, Valencia, Gonzalez, Rimé, and Diener, 2002) has shown that a person with high individualism correlated with "subjective well-being" (p. 105). In our study, we surmise that when a user has high individualism or high self, he or she is more susceptible to perceive positive subjective well-being, or enjoyment. Thus,

H2c: A high level of individualism (low collectivism) in a user would positively impact his or her perceived enjoyment.
H2d: A high level of individualism (low collectivism) in a user would negatively impact his or her perceived anxiety.

Femininity/Masculinity

Many researchers have generalized gender, gender roles, and masculinity/femininity into a coherent entity that a man would possess masculinity, and vice versa. In our present study, we

see masculinity as a personal characteristic. Nevertheless, research has shown that masculinity/femininity does influence a person's perception. "There are difference in perception on the Internet experience between men and women, and these differences transfer to the online shopping experiences" (Cyr and Head, 2013, p. 1358). Venkatesh and Morris (2000) assumed that there is a gender difference in terms of perception of a new IT's usefulness and intention to use.

Masculinity/Femininity describes that "a society in which social gender roles are clearly distinct: men are supposed to be assertive, tough, and focused on material success; women are supposed to be more modest, tender, and concerned with the quality of life" (Hofstede, 2001, p. 120). In a distinct gender role society, men and women are expected to act on certain roles and perform different tasks separately. The assertion aspect of masculinity has a strong implication on how men behave, where men are positioned as strong, rational, ego-centric, and self-sufficient (Sloan, Conner, and Gough, 2015) and these attributes contribute to asserting when a person with a high masculinity would have a positive impact on his/her perception of usefulness and ease of use when facing a new technology or information system. A person with masculinity characteristic is considered to be more ego centric and competitive (Basabe, Paez, Valencia, Gonzalez, Rimé, and Diener, 2002); thus, he or she would believe that using an IT and masterfully using it would enhance his or her job performance and satisfy his or her ego and competitiveness. Therefore, we hypothesize that,

H3a: A high level of femininity (low masculinity) in a user would negatively impact his or her perceived usefulness.
H3b: A high level of femininity (low masculinity) in a user would negatively impact his or her perceived ease of use.

Femininity is considered a trait that enables a person to be "more aware of other's feelings and concerned with group harmony, consensus building and interrelationships" (Sánchez-Franco, 2006, p. 21). Another view on femininity is that "the cultural values of femininity is the perceived obligation to provide emotional support" (Basabe, Paez, Valencia, Gonzalez, Rimé, and Diener, 2002, p. 106). We surmise that when a person has a high femininity trait, he or she would probably put other's emotions first or use other's emotions as a prior inference in that it would reduce his or her own hedonic perception on using an IT. Thus,

H3c: A high level of femininity (low masculinity) in a user would negatively impact his or her perceived enjoyment.
H3d: A high level of femininity (low masculinity) in a user would positively impact his or her anxiety.

Power Distance

Power distance is described as "the extent to which individuals accept unequal distribution of power among people at different levels in society" (Hofstede et al, 1991; Vidyarthi, Anand, and Liden, 2014, p. 235). In a high power distance society, people expect and accept the imbalance of "power" or authority. For example, people will expect and accept that a manager has a high level of power over subordinates or school teachers over students. Nelson and Quick (2003), note that power distance is "the degree to which a culture accepts unequal distribution of power" (p. 39). Compliance is also a noticeable trait of power distance in that a person with high power distance characteristic is more susceptible to be influenced by others, because he or she "hopes to achieve a favorable reaction from another person or group" (Kelman, 1958, p. 56). A high power distance characteristic implies that a person has accepted the unequal power status. For example, an office worker accepts one's role and submits under his or her manager as a norm. We hypothesized that an increase in power distance would decrease a user's

perception on technology acceptance because the worker's perception would not weigh in much on his or her perspective of job performance or achievement. Thus,

H4a: A high level of power distance in a user would negatively impact his or her perceived usefulness.
H4b: A high level of power distance in a user would negatively impact his or her perceived ease of use.

Again, power distance characteristic has impelled a worker's self-perception on how and what he or she perceives an emotional response. Superior social influence would probably take the precedence on his or her enjoyment. On the other hand, a high power distance characteristic would probably amplify a worker's perceived anxiety or fear. He or she would feel anxious or afraid if he or she disappoints one's superiors. We hypothesize that power distance would have a negative effect on a person's perception of cognition and emotions, since power distance is a person's acceptance level of power imbalance. Thus,

H4c: A high level of power distance in a user would negatively impact his or her perceived enjoyment.
H4d: A high level of power distance in a user would positively impact his or her perceived anxiety.

Technology Acceptance Model (TAM)

In the past, information technology acceptance and adoption models have been drawn from sociology, philosophy, psychology, and social psychology and focused on a user's cognition, which is "driven by conscious decisions to act" (de Guinea and Markus, 2009, p. 433). They have provided invaluable findings on how people perceive and ultimately act when facing a new technology at work. The fundamental assumption was that that people would make rational, conscious, and cognitive decisions. Davis's (1989 and 1991) Technology Acceptance Model (TAM) gave a simple yet logical explanation for the acceptance of new information technologies.

Depending on a user's perceptions of usefulness and ease of use of a new technology, the perceptions would determine a user's behavioral intention and then use. If a user perceives a new information technology as both useful and easy to use in his/her work, he/she would have a higher tendency or probability (behavioral intention) to use that technology. TAM (Davis, 1989; Davis, Bagozzi and Warshaw, 1989) has been a sentinel research model in explaining and predicting a user's intention to use a new technology in an office setting. However, when an office worker is given a new technology to use, he or she does not necessarily have a choice to either to use that technology or not. On the contrary, a worker may feel challenged or threatened using the new technology/information system when it is required for him/her to use it. Research has shown that "ambiguity and uncertainty are certainly conceptually linked" (Greco and Roger, 2001). When office workers are facing an ambiguous or unpredicted event (in our research context, using a new technology or an information system at a workplace), uncertainty and subsequent anticipatory anxiety may have a significant role as to how workers perceive the technology.

We believe that humans are complex, and often do not act logically or reasonably because we also have emotions and other murky existing thoughts which may play significant roles on how we behave. The theme of Davis' TAM is based on the assumption that one's reasoning is solely reliant on cognition: if perception is positive it would lead to positive behavioral intentions, and thus to actual behaviors. Nevertheless, TAM has provided a profound foundation on explaining a user's technology acceptance intentions and behaviors. We utilize TAM's three constructs, perceived ease of use, perceived usefulness, and behavioral intention, as a base in our research model. These relationships have been well argued and proven in many previous studies and will only be presented briefly here. Thus:

H5: An increase in perceived usefulness (PU) would increase a user's behavioral intention to use (BIU).
H6: An increase in perceived ease of use (PEOU) would increase a user's behavioral intention to use (BIU).
H7: An increase in perceived ease of use (PEOU) would increase A user's perceived usefulness (PU).

Commitment and Control

Lazarus and Folkman's cognitive appraisal has raised two salient personal characteristics, commitments and beliefs, which could impact a person's appraisal thresholds. "Given an encounter, those two characteristics would determine a person's understanding of what is important to him or her, the consequence of his emotions and coping efforts, and the basis for evaluating possible outcomes" (Lazarus and Folkman, 1984, p. 55). Lazarus and Folkman defined perceived control as "the extent to which people assume they can control events and outcomes of importance" (Lazarus and Folkman, 1984, p. 66). Studies (Lazarus and Folkman, 1984; Rotter, 1975) have shown that the relationship between the situation and perceived control, particularly when a situation is highly ambiguous, a person with internal locus of control (which refers to "the belief that events are contingent upon one's own behavior" (Lazarus and Folkman, 1984, p. 66) might be expected to appraise the situation as controllable, whereas a person with external locus of control, which refers to "the belief that events are not contingent to one's actions, but upon luck, chance, fate, or powerful others" (Lazarus and Folkman, 1984, p. 66) might be expected to appraise the situation as uncontrollable. When a situation is not highly ambiguous, the appraisal of controllability would be impacted more by the characteristics of the situation, but not general beliefs (Lazarus and Folkman, 1984). We expect that the characteristics of a utility oriented new technology under an involuntary work-related environment would have a higher ambiguity than of a pleasure oriented technology under a voluntary environment.

Lazarus (1984) has made a distinction regarding belief about control, which could be "a belief in a specific context or a general belief" (p. 69). He has also pointed out that researchers use self-efficacy, illusion of control, or the sense of control (Bandura, 1977; Langer, 1975; Lefcourt, 1973) as measured in a specific context. In this study, we follow this train of thought and definitions, but not on a general belief, which is an expression of one's sense of control over one's life.

Lazarus and Folkman (1984) stated that "commitments express what is important to the person, what has meaning for him or her, and they underlie the choices people make, whereas their beliefs determine how a person evaluates what is happening or is about to happen" (p. 80). Davis' TAM has minimized the role of personal factors; however, we believe that, based on the characteristics of a new information technology and the requirement circumstance, personal factors would have an influential impact on a person's cognition and emotions. Research has shown that when people feel confident of their power or ability to control their tasks or environment, they tend to perceive more positive feelings (Lazarus and Folkman, 1984; Murphy and Moriarty, 1976). Carlson (1982) had a review of four models of perceived control in the context of biofeedback, where perceived control is about a person whose mastery and confidence of feelings and situation-specific expectations is measured. Lazarus and Folkman (1984) stated that "beliefs about control, whether shaped more by person factors or situational contingencies, play a major role in determining the degree to which a person feels threatened or challenged in a stressful encounter" (p. 76), and concluded that "one's belief in one's ability to control an event influences how that event is appraised and, through appraisal, subsequent coping activities" (p.77). We interpret that beliefs of control have substantial influences on a person's perception and emotional state of mind, and ultimately impact a person's behaviors. In the event of

accepting and/or adopting a new information technology, a person's belief of control should have a significant impact on how he/she appraises the event.

Appraisal Theory provided a framework suggesting that a person's "personal factor" (commitment and perceived control) would impact his/her cognition. A new technology user's personal factors (commitment and perceived control) would positively impact his/her cognitive responses (perceived usefulness and perceived ease of use). The personal factor is a predisposition of thinking. When a person is committed to a new technology, that commitment will positively enhance his/her perceived usefulness and perceived ease of use of that technology. Appraisal Theory has stated that "commitments express what is important to the person, what has meaning for him or her. They determine what is at stake" (Lazarus and Folkman, 1984, p. 56). Therefore, when a person feels that a technology has meaning to him or her, he or she will develop a sense of commitment, which will be positively correlated to his or her perceived usefulness and perceived ease of use of that technology.

H8: An increase of a person's commitment (CO) will increase his or her perceived usefulness (PU).
H9: An increase of a person's commitment (CO) will increase his or her perceived ease of use (PEOU).

Lazarus and Folkman (1984) have stated that "a general belief about control concerns the extent to which people assume they can control events or outcomes of importance" (p. 66). And when a person has perceived control of a new technology, that perception of control will positively enhance his/her perceived usefulness and ease of intention to use of that technology.

H10: An increase of a person's perceived control (PC) will increase his or her perceived usefulness (PU).
H11: An increase of a person's perceived control (PC) will increase his or her perceived ease of use (PEOU).

Social Norms

Studies have shown that a person's "self" is influenced by his or her social surroundings (Venkatesh and Davis, 1996, 2000; Venkatesh, Morris, Davis, and Davis, 2003). In other words, social norms have a significant impact on a person's well-being. A social outcome is a total function and accumulation of individual's emotions and interactions with each other. Apple's products (iPod, iPhone, iPad, and MacBook) have created a cult-like phenomenon among their users. The success of the iPhone has changed not only the personal use of smartphones but also corporations' communication choice for their employees. The "like" factor of Apple's products dominates over most of Apple competitors'. The emotional attachment toward Apple's products, especially the iPhone, prompts waves of customers to the storefronts and Apple's Website, whenever a new version of the iPhone was launched to the market. The "like" feature on Facebook.com hopes to generate and heighten users' favorable feelings toward its site. Twitter.com connects a user's and his/her followers' emotions together using a 140word count statement. In previous theories and research on a person's "self" concept (Hilgard, 1949; Epstein, 1976), the "self", according to Hilgard (1949), is in part of a combination of interpersonal motives and attitudes that are of central importance to the person. Epstein (1976) stressed that emotions are the indicators of what is important to the person. In order to understand or predict a person's behaviors, we need to understand both what the logical thinking (cognition) is along with what is important to the person (emotions).

In TRA, subjective norms were defined as "the person's perception that most people who are important to him think he should or should not perform the behavior in question" (Fishbein and Ajzen 1975, p. 302). Social norms have a tremendous impact on the "self" in a person. We, as humans, are social beings. We were born, live, learn, and are taught with and by others, who

are important to us. Thompson et al (1991) has stressed the importance of social factors in influencing human behaviors that "social factors are the individual's internalization of the reference group's subjective culture, and specific interpersonal agreements that the individual has made with others, in specific social situation" (Thompson, Higgins, and Howell, 1991, p. 126). Subjective norms or social norms have a suggestive power over individuals. We often seek a form of approval from people, whom we think are important to us. This type of a form of approval may cause a person's positive or negative feelings. We believe that positive or supportive social norms align with a person's positive emotion and vice versa. Thus, we hypothesized that social norms have an impact on emotional factors that when a person perceives a positive or approval sense of "social norms", he/she will perceive a higher enjoyment, and when a person perceives a negative or disapproval sense of "social norms, he/she will perceive a higher anxiety/fear.

H12: An increase of a person's social norms will increase his or her perceived enjoyment.
H13: An increase of a person's social norms will decrease his or her perceived anxiety/fear.

Beliefs are what we/human beings think are true and anchor these understandings to handle the upcoming events and surrounding environment. Beliefs are the product of logical thinking and evaluation. In Lazarus and Folkman's Appraisal Theory (Lazarus, 1991 and Lazarus and Folkman, 1984), they regarded that beliefs are how we determine what the fact is, that is, how things are in our environment and what is the way that they shape our understanding of its meaning. Lazarus and Folkman (1984) believed that culture and personal factors shape a person's understanding of his/her surrounding environment; in other words, they believed that cultural and personal factors shape a person's beliefs. Bem (1970) distinguishes two levels of beliefs, primitive and higher-order. Primitive beliefs reside in a subconscious state within a

person; when those beliefs are needed, they will emerge under specific circumstances. “Higher-order beliefs are learned” (Lazarus and Folkman 1984, p. 64) from experiences and over time become personal primitive beliefs. Often beliefs are operating underneath a personal’s explicit awareness; nevertheless, beliefs could shape a person’s perceptions. We operationalized cultural constructs, which are derived from Hofstede’s four cultural dimensions (individualism/collectivism, power distance, uncertainty avoidance, and masculinity/femininity). The emotional factor was dissected into two general dimensions (positive and negative emotion) for the current research model to examine the effect of culture. In addition, the added constructs should demonstrate notable influences on a person’s cognition and emotion, and ultimately his/her technology use. Lazarus and Folkman (1984) believed that beliefs are “personally formed or culturally shared cognitive configurations” (p. 63) that belief systems are built into us both by ourselves and the culture we grew up with. According to Mandler (1975), an arousal “provides the emotional tone for a particular cognition, and cognition provides the emotional state” (p. 68). Therefore, we believe that culture, emotion, and cognition are all interconnected, that ultimately influence what we decipher our surrounding environment and events and make wagers to our future.

Hypotheses 5 to 13 are from our essay 1, which is not the main focus on this study. To simplify our research model, we’ve decided not to label those hypotheses.

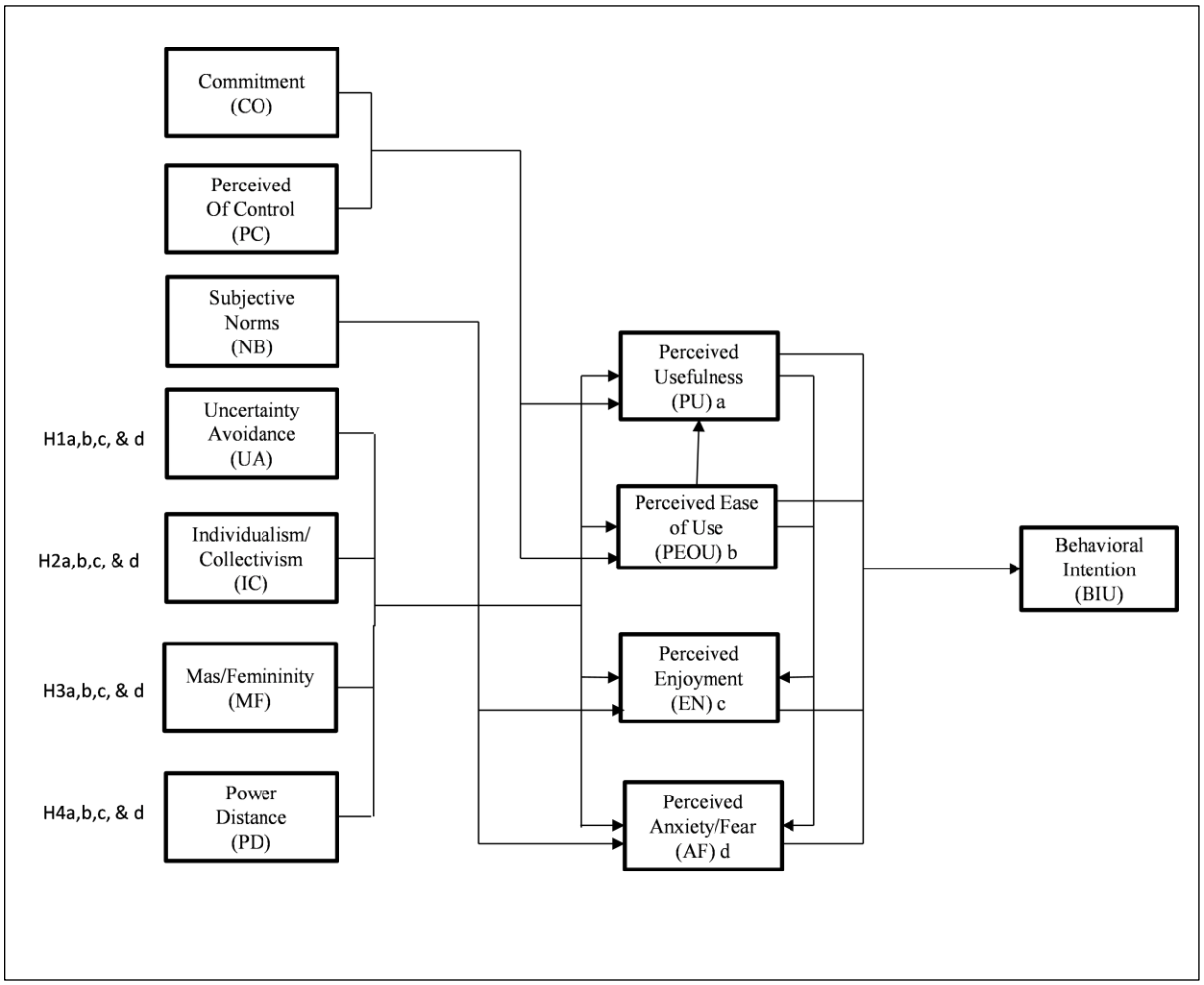

Figure 8: Research Model (Essay 2)

2.3 Research Methodology

Data Collection and Instrument Development

The data for this study was collected and compiled using an online survey from one midsize university in the U.S. The questionnaire was organized into different sections to separate demographic information and behavioral constructs. Students were taught that Enterprise Resource Planning (ERP) is a business process management software, which allows an organization to solve an information silo obstacle by using a centralized database along with built in industry-best-practice business applications. Later, students also participated a two-day-course ERP-SAP simulation game to get familiar with the software program. In total, 516 student participants' surveys (210 females, 306 males) were collected and analyzed. The student participants were asked to rate their level of agreement of a 7-point Likert scale using to measure each measuring item (1=strongly disagree to 7=strongly agree).

In this study, we have utilized existing items from previously published research. Hofstede's four cultural dimension constructs were derived from Srite and Karahanna (2006), the commitment construct was derived and modified from Beatson, Coote, and Rudd (2006), the "perceived of control", "perceived enjoyment", and "perceived anxiety/fear" constructs are from Venkatesh (2000), and the "perceived usefulness", "perceived ease of use", "behavioral intention", and "social norms" constructs are from Venkatesh, Morris, Davis, and Davis (2003).

2.4 Data Analysis

We used Structural Equation Modeling (SEM), which is a statistical technique, and has been widely adapted in social science research, to analyze our data. SEM incorporates two models, a structural model for testing causal relationships, and a measurement model for measuring each construct or latent variable. The main goal of SEM is to test and estimate causal

relationships, thus to explain the variance of target dependent variables. The Partial Least Squares – Structural Equation Modeling (PLS - SEM) technique was used. PLS is a form of the SEM method and a predictive analysis. PLS path modeling analyzes constructs or latent variables in a causal network, and then estimates explained variances. Contextual factors, such as age, education, occupation, would be treated as control variables, since our investigation is to examine cultural differences as the locus of our study.

Reliability and Validity Assessments:

In order to assess the quality of the measurement model, we examined the reliability and validity of the constructs. The recommended acceptable reliability and validity criteria of this study are through the following: 1) reliability (internal consistency) is demonstrated by composite reliability greater than 0.70, 2) convergent validity is demonstrated by the average variance extracted (AVE) greater than 0.50, and loadings in a confirmatory factor analysis (CFA) being greater than 0.70, and 3) discriminant validity is evaluated by two criteria: the square root of the average variance extracted (AVE) being greater than any of the inter-constructs, and that indicators' loadings are greater than other indicators of other constructs' loadings (Fornell and Larcker, 1981) and of all indicators' (items) loading of one construct should be greater than all of its loading on other constructs (cross loadings) (Chin, 1998; Fornell and Larcker, 1981).

The composite reliability (Table 15) of all twelve constructs ranged from 0.80 to 0.95, which are above the 0.70 recommended level (Fornell and Larcker, 1981). AVE (Table 15) indices ranged from 0.67 to 0.85, which are above the 0.50 recommended level. Cross loadings (Table 16) from our confirmatory factor analysis table, all measurement items exceeded the 0.70 threshold, except item UA2, which was at 0.67, and was retained since it was fairly close to the

threshold and dropping it would result in a one-item scale for the construct. Both results satisfied convergent validity.

To assess the discriminant validity, we examined the square root of the average variance extracted (AVE), which should be greater than any of the inter-construct, and indicators' loadings should be stronger than other indicators of other constructs' loadings (Chin, 1998). All eight constructs satisfied these two criteria, loadings from each construct are greater loadings of other constructs and the square root of AVE of each construct (bold values on the diagonal of Table 15) is larger than its correlation with other constructs, and the condition of cross loadings is also satisfied (Table 16).

	Composite Reliability	**AVE**	Behavioral Intention	Commitment	Individualism/ Collectivism	Masc/Feminism	Perceived Anxiety/ Fear	Perceived Control	Perceived Ease of Use	Perceived Enjoyment	Perceived Usefulness	Power Distance	Social Norms	Uncertainty Avoidance
Behavioral Intention	0.92	0.85	**0.92**											
Commitment	0.92	0.67	0.82	**0.82**										
Individualism/Collectivism	0.89	0.73	0.15	0.25	**0.85**									
Masc/Feminism	0.84	0.72	0.20	0.31	0.44	**0.85**								
Perceived Anxiety/Fear	0.94	0.75	-0.30	-0.30	0.26	0.16	**0.87**							
Perceived Control	0.88	0.78	0.58	0.67	0.07	0.13	-0.37	**0.88**						
Perceived Ease of Use	0.91	0.73	0.58	0.65	0.05	0.14	-0.48	0.76	**0.85**					
Perceived Enjoyment	0.93	0.78	0.69	0.80	0.14	0.23	-0.32	0.68	0.62	**0.88**				
Perceived Usefulness	0.95	0.75	0.75	0.78	0.13	0.18	-0.30	0.65	0.62	0.67	**0.87**			
Power Distance	0.89	0.73	0.19	0.25	0.45	0.51	0.36	0.03	0.07	0.24	0.09	**0.86**		
Social Norms	0.87	0.69	0.66	0.71	0.21	0.25	-0.16	0.52	0.46	0.60	0.64	0.27	**0.83**	
Uncertainty Avoidance	0.80	0.68	0.12	0.14	0.08	-0.07	-0.09	0.17	0.09	0.13	0.22	-0.12	0.11	**0.82**

*Diagonal elements in the correlation of constructs matrix are the square root of the average variance extracted (AVE).
For adequate discriminant validity, diagonal elements should be greater than corresponding off-diagonal elements.

Table 15: Inter-Construct Correlations (Model 1)

	Perceived Anxiety/ Fear	Behavioral Intention	Commitment	Perceived Enjoyment	Individualism/ Collectivism	Masc./Feminism	Social Norms	Perceived Control	Power Distance	Perceived Ease of Use	Perceived Usefulness	Uncertainty Avoidance
AF1	0.90	-0.31	-0.32	-0.35	0.19	0.14	-0.21	-0.41	0.32	-0.47	-0.31	-0.17
AF2	0.82	-0.28	-0.23	-0.26	0.20	0.12	-0.21	-0.23	0.40	-0.35	-0.26	-0.04
AF3	0.90	-0.31	-0.26	-0.32	0.24	0.16	-0.09	-0.38	0.32	-0.44	-0.30	-0.11
AF6	0.86	-0.17	-0.24	-0.21	0.19	0.15	-0.12	-0.26	0.27	-0.37	-0.21	-0.07
AF7	0.86	-0.20	-0.23	-0.22	0.30	0.15	-0.03	-0.28	0.25	-0.42	-0.20	0.00
BI1	-0.26	0.92	0.75	0.65	0.12	0.16	0.64	0.58	0.13	0.53	0.68	0.12
BI2	-0.29	0.92	0.76	0.62	0.16	0.21	0.58	0.49	0.23	0.53	0.71	0.09
CO1	-0.07	0.57	0.77	0.70	0.25	0.44	0.58	0.53	0.46	0.54	0.58	0.05
CO3	-0.29	0.69	0.86	0.73	0.12	0.17	0.68	0.63	0.20	0.55	0.67	0.13
CO4	-0.19	0.57	0.76	0.66	0.27	0.33	0.52	0.54	0.25	0.50	0.52	0.12
CO6	-0.31	0.71	0.85	0.60	0.19	0.24	0.57	0.47	0.08	0.47	0.68	0.13
CO7	-0.23	0.68	0.80	0.54	0.16	0.17	0.53	0.47	0.05	0.49	0.62	0.08
CO8	-0.34	0.76	0.87	0.71	0.24	0.21	0.57	0.64	0.18	0.61	0.75	0.16
EN1	-0.37	0.64	0.72	0.88	0.07	0.14	0.49	0.59	0.14	0.61	0.61	0.17
EN2	-0.26	0.63	0.72	0.89	0.14	0.26	0.58	0.64	0.23	0.54	0.63	0.15
EN3	-0.26	0.58	0.71	0.88	0.18	0.19	0.53	0.59	0.20	0.51	0.56	0.03
EN4	-0.23	0.58	0.69	0.88	0.13	0.21	0.52	0.59	0.28	0.52	0.55	0.10
IC1	0.26	0.15	0.22	0.12	0.89	0.40	0.13	0.05	0.43	0.00	0.09	0.08
IC2	0.21	0.12	0.20	0.10	0.88	0.41	0.13	0.03	0.37	0.08	0.08	-0.04
IC6	0.18	0.11	0.21	0.14	0.78	0.30	0.27	0.11	0.33	0.05	0.17	0.16
MF7	0.10	0.19	0.26	0.19	0.38	0.84	0.17	0.08	0.43	0.16	0.15	-0.07
MF8	0.18	0.16	0.26	0.20	0.36	0.86	0.25	0.13	0.43	0.08	0.16	-0.06
NB1	-0.06	0.52	0.58	0.50	0.17	0.28	0.80	0.42	0.30	0.36	0.55	0.08
NB2	-0.20	0.62	0.63	0.57	0.14	0.20	0.91	0.51	0.24	0.45	0.53	0.07
NB4	-0.12	0.50	0.55	0.41	0.23	0.14	0.79	0.36	0.10	0.31	0.52	0.13
PC1	-0.35	0.56	0.63	0.71	0.02	0.19	0.45	0.88	0.06	0.65	0.59	0.11
PC4	-0.30	0.46	0.56	0.49	0.10	0.04	0.47	0.88	-0.01	0.68	0.55	0.20
PD2	0.27	0.13	0.17	0.15	0.29	0.37	0.25	-0.01	0.84	0.08	0.01	-0.25

PD4	0.30	0.15	0.21	0.19	0.42	0.48	0.17	-0.05	0.84	0.03	0.11	0.00
PD7	0.34	0.20	0.24	0.26	0.42	0.45	0.26	0.10	0.89	0.07	0.09	-0.09
PEOU1	-0.39	0.36	0.46	0.53	0.05	0.20	0.29	0.64	0.14	0.85	0.45	0.02
PEOU2	-0.41	0.58	0.58	0.54	0.06	0.12	0.40	0.58	0.08	0.86	0.57	0.12
PEOU3	-0.42	0.39	0.48	0.44	-0.02	0.00	0.35	0.66	-0.07	0.83	0.46	0.15
PEOU6	-0.40	0.60	0.66	0.59	0.08	0.15	0.50	0.70	0.09	0.87	0.60	0.03
PU1	-0.19	0.63	0.65	0.53	0.21	0.21	0.60	0.53	0.18	0.47	0.81	0.08
PU2	-0.29	0.68	0.72	0.65	0.12	0.19	0.59	0.58	0.12	0.58	0.88	0.15
PU3	-0.25	0.65	0.68	0.55	0.13	0.17	0.50	0.58	0.04	0.57	0.91	0.26
PU4	-0.27	0.62	0.62	0.51	0.13	0.13	0.53	0.49	0.05	0.49	0.86	0.23
PU5	-0.28	0.68	0.71	0.59	0.11	0.16	0.52	0.57	0.04	0.54	0.88	0.13
PU6	-0.27	0.66	0.68	0.64	0.01	0.10	0.58	0.61	0.04	0.54	0.86	0.30
UA1	-0.12	0.13	0.15	0.13	0.07	-0.08	0.12	0.17	-0.15	0.12	0.22	0.95
UA2	0.00	0.04	0.04	0.07	0.09	-0.02	0.04	0.10	0.01	-0.01	0.12	0.67

Table 16: PLS Confirmatory Factor Analysis (Convergent Validity) (Model 1)

Figure 9: Path Coefficients and R^2 (Model 1)

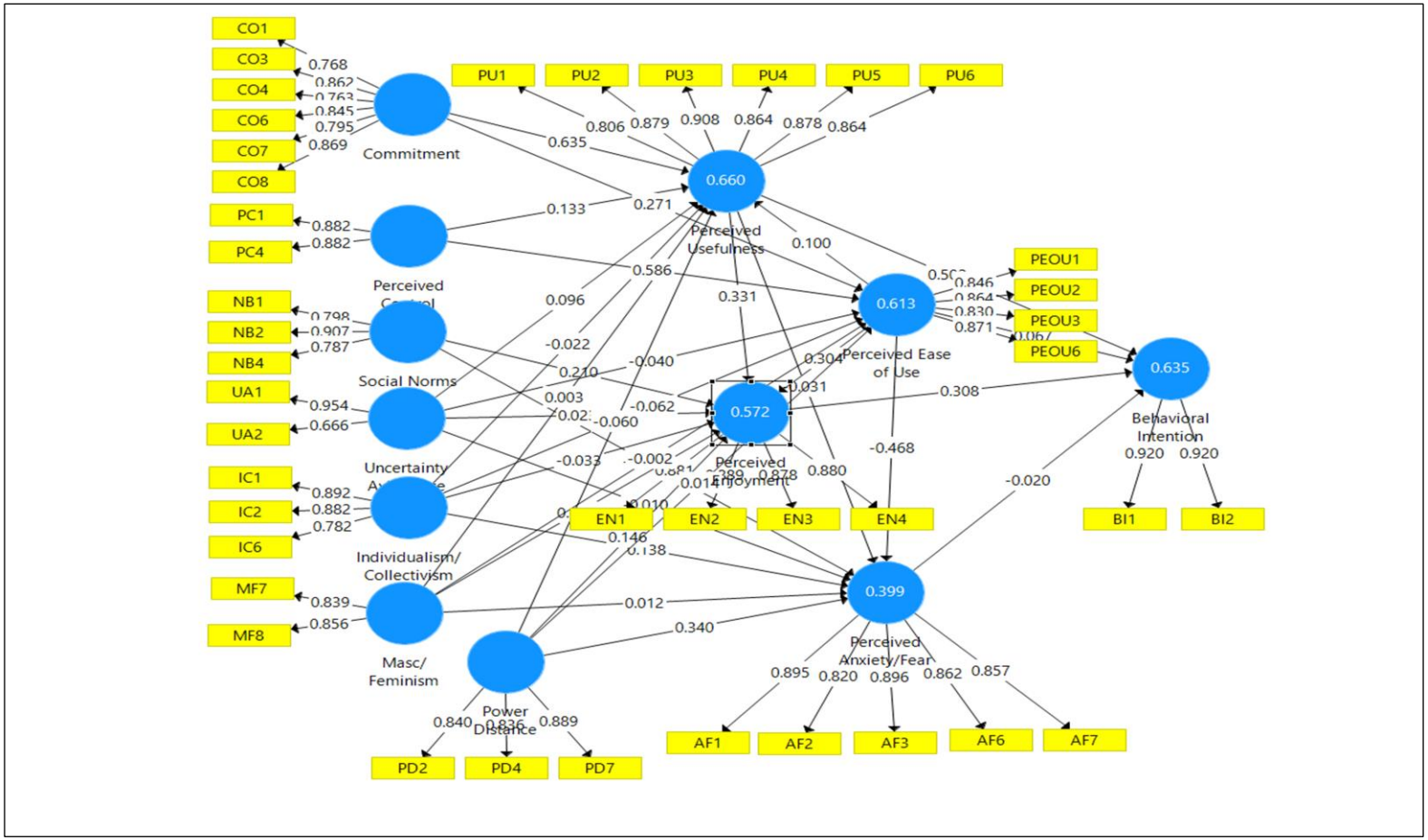

Model Testing

SEM-PLS path analysis and T-statistics were used to evaluate the proposed research model and the relationships among the constructs. Table 17 shows the overall results of the study. The model presents 64% of explained variance in a user's behavioral intention, which in general exceeded the results of previous user technology acceptance and use research. Two constructs, perceived usefulness and perceived enjoyment, were supported as hypothesized in their relationships to behavioral intention, but the constructs of perceived ease of use and perceived anxiety/fear did not significantly influence behavioral intentions. 66% of the explained variance of perceived usefulness was presented by the supported constructs of commitment and one cultural dimension construct (uncertainty avoidance). However, the constructs of perceived control, perceived ease of use, and three cultural dimension constructs (individualism/collectivism, power distance, and masculinity/femininity), were not significant. 61% of the explained variance of perceived ease of use was presented by the supported constructs of perceived control and commitment, but not from any of cultural constructs. 40% of the explained variance of perceived anxiety/fear was supported by the constructs of perceived usefulness and perceived ease of use and one cultural construct, power distance, but not by the construct of social norms or the rest of three cultural constructs. 57% of the explained variance of perceived enjoyment was supported by four constructs, perceived usefulness, perceived ease of use, social norms, and power distance, but not by three cultural constructs, individualism/collectivism, uncertainty avoidance, and masculinity/femininity. These results are shown in Table 17.

Table 17: Model Testing Results (Model 1)

Dependent Variable	Independent Variable(s)	R^2	β	Hypothesis Supported
Behavioral Intention		0.64		
	Perceived Usefulness (PU)		0.50***	Yes
	Perceived Ease of Use (PEOU)		0.07	No
	Perceived Enjoyment (EN)		0.31***	Yes
	Perceived Anxiety/Fear (AF)		-0.02	No
Perceived Usefulness		0.66		
	Commitment (CO)		0.64***	Yes
	Perceived Control (PC)		0.13	No
	Perceived Ease of Use (PEOU)		0.10	No
	Individualism/Collectivism		-0.02	No
	Masc/Feminism		0.00	No
	Power Distance		-0.06	No
	Uncertainty Avoidance		0.10*	Yes
Perceived Ease of Use		0.61		
	Commitment (CO)		0.27***	Yes
	Perceived Control (PC)		0.59***	Yes
	Individualism/Collectivism		-0.06	No
	Masc/Feminism		0.00	No
	Power Distance		0.01	No
	Uncertainty Avoidance		-0.04	No
Perceived Anxiety/Fear		0.40		
	Perceived Usefulness (PU)		-0.03***	Yes
	Perceived Ease of Use (PEOU)		-0.47**	Yes
	Social Norms (NB)		-0.04	No
	Individualism/Collectivism		0.14	No
	Masc/Feminism		0.01	No
	Power Distance		0.34***	Yes
	Uncertainty Avoidance		-0.01	No
Perceived Enjoyment		0.57		
	Perceived Usefulness (PU)		0.33***	Yes
	Perceived Ease of Use (PEOU)		0.30***	Yes
	Social Norms (NB)		0.21**	Yes
	Individualism/Collectivism		-0.03	No
	Masc/Feminism		0.02	No
	Power Distance		0.15**	Yes
	Uncertainty Avoidance		0.02	No

The results have shown that two cultural dimensions, power distance and uncertainty avoidance, have a stronger and more significant effect on one's emotions and cognition, and subsequently one's behavioral intention in term of technology adoption.

Model 2

As was just shown in the above analysis, two of the cultural dimensions, individualism/collectivism, and masculinity/femininity, were not supported. We decided to rerun the analysis and drop the two underperforming cultural dimensions, to, hopefully, better the results, which are shown below.

Reliability and Validity Assessments:

To assess the measurement quality of the model 2, we've re-examined the reliability and convergent and discriminant validities of the constructs. The recommended acceptable reliability and validity assessments of this study are the same as previously described,

Using the same evaluation processes as in model 1, the reliability (internal consistency) of all ten constructs ranged from 0.80 to 0.95 (Table 18), which are above the 0.70 recommended level (Fornell and Larcker, 1981). AVE (Table 18) indices ranged from 0.68 to 0.85, which are above the 0.50 recommended level and indicates a strong convergent validity of the measuring items. Loadings (Table 19) from our confirmatory factor analysis table ranged from 0.76 to 0.95 (except item (UA2), which is 0.67 < 0.70). To be consistently compare to model 1, we extracted the same measuring items for each construct, therefore the low loading of this particular item may due to the unified item processing, which although slightly below the 0.70 recommended level, did not cross-load on other constructs and was retained. Both results satisfied convergent validity. To assess the discriminant validity, we examined the square root of the average variance

extracted (AVE), which should be greater than any of the inter-construct, and indicators' loadings should be stronger than other indicators of other constructs' loadings (Chin, 1998). All eight constructs satisfied these two criteria, loadings from each construct were greater than loadings of other constructs and the square root of AVE of each construct (bold values on the diagonal of Table 18) was larger than its correlation with other constructs.

	Composite Reliability	AVE	Behavioral Intention	Commitment	Perceived Anxiety/ Fear	Perceived Control	Perceived Ease of Use	Perceived Enjoyment	Perceived Usefulness	Power Distance	Social Norms	Uncertainty Avoidance
Behavioral Intention	**0.92**	0.85	**0.92**									
Commitment	**0.92**	0.67	0.82	**0.82**								
Perceived Anxiety/Fear	**0.94**	0.75	-0.30	-0.30	**0.87**							
Perceived Control	**0.88**	0.78	0.58	0.67	-0.37	**0.88**						
Perceived Ease of Use	**0.91**	0.73	0.58	0.65	-0.47	0.76	**0.85**					
Perceived Enjoyment	**0.93**	0.78	0.69	0.80	-0.32	0.68	0.62	**0.88**				
Perceived Usefulness	**0.95**	0.75	0.75	0.78	-0.30	0.65	0.62	0.67	**0.87**			
Power Distance	**0.89**	0.73	0.19	0.25	0.36	0.03	0.07	0.24	0.09	**0.86**		
Social Norms	**0.87**	0.69	0.66	0.71	-0.16	0.52	0.46	0.60	0.64	0.27	**0.83**	
Uncertainty Avoidance	**0.80**	0.68	0.12	0.14	-0.10	0.17	0.09	0.13	0.22	-0.12	0.11	**0.82**

*Diagonal elements in the correlation of constructs matrix are the square root of the average variance extracted (AVE).
For adequate discriminant validity, diagonal elements should be greater than corresponding off-diagonal elements.

Table 18: Inter-Construct Correlations (Model 2)

	Perceived Anxiety/Fear	Behavioral Intention	Commitment	Perceived Enjoyment	Social Norms	Perceived Control	Power Distance	Perceived Ease of Use	Perceived Usefulness	Uncertainty Avoidance
AF1	0.90	-0.31	-0.32	-0.35	-0.21	-0.41	0.32	-0.47	-0.31	-0.17
AF2	0.82	-0.28	-0.23	-0.26	-0.21	-0.23	0.40	-0.35	-0.26	-0.04
AF3	0.90	-0.31	-0.26	-0.32	-0.09	-0.38	0.32	-0.44	-0.30	-0.11
AF6	0.86	-0.17	-0.24	-0.21	-0.12	-0.26	0.27	-0.37	-0.21	-0.07
AF7	0.85	-0.20	-0.23	-0.22	-0.03	-0.28	0.25	-0.42	-0.20	0.00
BI1	-0.27	0.92	0.75	0.65	0.64	0.58	0.13	0.53	0.68	0.12
BI2	-0.29	0.92	0.76	0.62	0.58	0.49	0.23	0.53	0.71	0.09
CO1	-0.07	0.57	0.77	0.70	0.58	0.53	0.46	0.54	0.58	0.05
CO3	-0.29	0.69	0.86	0.73	0.68	0.63	0.20	0.55	0.67	0.13
CO4	-0.19	0.57	0.76	0.66	0.52	0.54	0.25	0.50	0.52	0.12
CO6	-0.31	0.71	0.85	0.60	0.57	0.47	0.08	0.47	0.68	0.13
CO7	-0.23	0.68	0.80	0.54	0.53	0.47	0.05	0.49	0.62	0.08
CO8	-0.34	0.76	0.87	0.71	0.57	0.64	0.18	0.61	0.75	0.16
EN1	-0.37	0.64	0.72	0.88	0.49	0.59	0.14	0.61	0.61	0.17
EN2	-0.26	0.63	0.72	0.89	0.58	0.64	0.23	0.54	0.63	0.15
EN3	-0.26	0.58	0.71	0.88	0.53	0.59	0.20	0.51	0.56	0.03
EN4	-0.23	0.58	0.69	0.88	0.52	0.59	0.28	0.52	0.55	0.10
NB1	-0.06	0.52	0.58	0.50	0.80	0.42	0.30	0.36	0.55	0.08
NB2	-0.20	0.62	0.63	0.57	0.91	0.51	0.24	0.45	0.53	0.07
NB4	-0.12	0.50	0.55	0.41	0.79	0.36	0.10	0.31	0.52	0.13
PC1	-0.35	0.56	0.63	0.71	0.45	0.88	0.06	0.65	0.59	0.11
PC4	-0.30	0.46	0.56	0.49	0.47	0.88	-0.01	0.68	0.55	0.20
PD2	0.27	0.13	0.17	0.15	0.25	-0.01	0.84	0.08	0.01	-0.25
PD4	0.30	0.15	0.21	0.19	0.17	-0.05	0.84	0.03	0.11	0.00
PD7	0.34	0.20	0.24	0.26	0.26	0.10	0.89	0.07	0.09	-0.09
PEOU1	-0.39	0.36	0.46	0.53	0.29	0.64	0.14	0.85	0.45	0.02
PEOU2	-0.41	0.58	0.58	0.54	0.40	0.58	0.08	0.86	0.57	0.12
PEOU3	-0.42	0.39	0.48	0.44	0.35	0.66	-0.07	0.83	0.46	0.15

PEOU6	-0.40	0.60	0.66	0.59	0.50	0.70	0.09	0.87	0.60	0.03
PU1	-0.19	0.63	0.65	0.53	0.60	0.53	0.18	0.47	0.81	0.08
PU2	-0.29	0.68	0.72	0.65	0.59	0.58	0.12	0.58	0.88	0.15
PU3	-0.25	0.65	0.68	0.55	0.50	0.58	0.04	0.57	0.91	0.26
PU4	-0.27	0.62	0.62	0.51	0.53	0.49	0.05	0.49	0.87	0.23
PU5	-0.28	0.68	0.71	0.59	0.52	0.57	0.04	0.54	0.88	0.13
PU6	-0.27	0.66	0.68	0.64	0.58	0.61	0.04	0.54	0.86	0.30
UA1	-0.12	0.13	0.15	0.13	0.12	0.17	-0.15	0.12	0.22	0.95
UA2	0.00	0.04	0.04	0.07	0.04	0.10	0.01	-0.01	0.12	**0.67**

Table 19: PLS Confirmatory Factor Analysis (Model 2)

Figure 10: Path Coefficients and R^2 (Model 2)

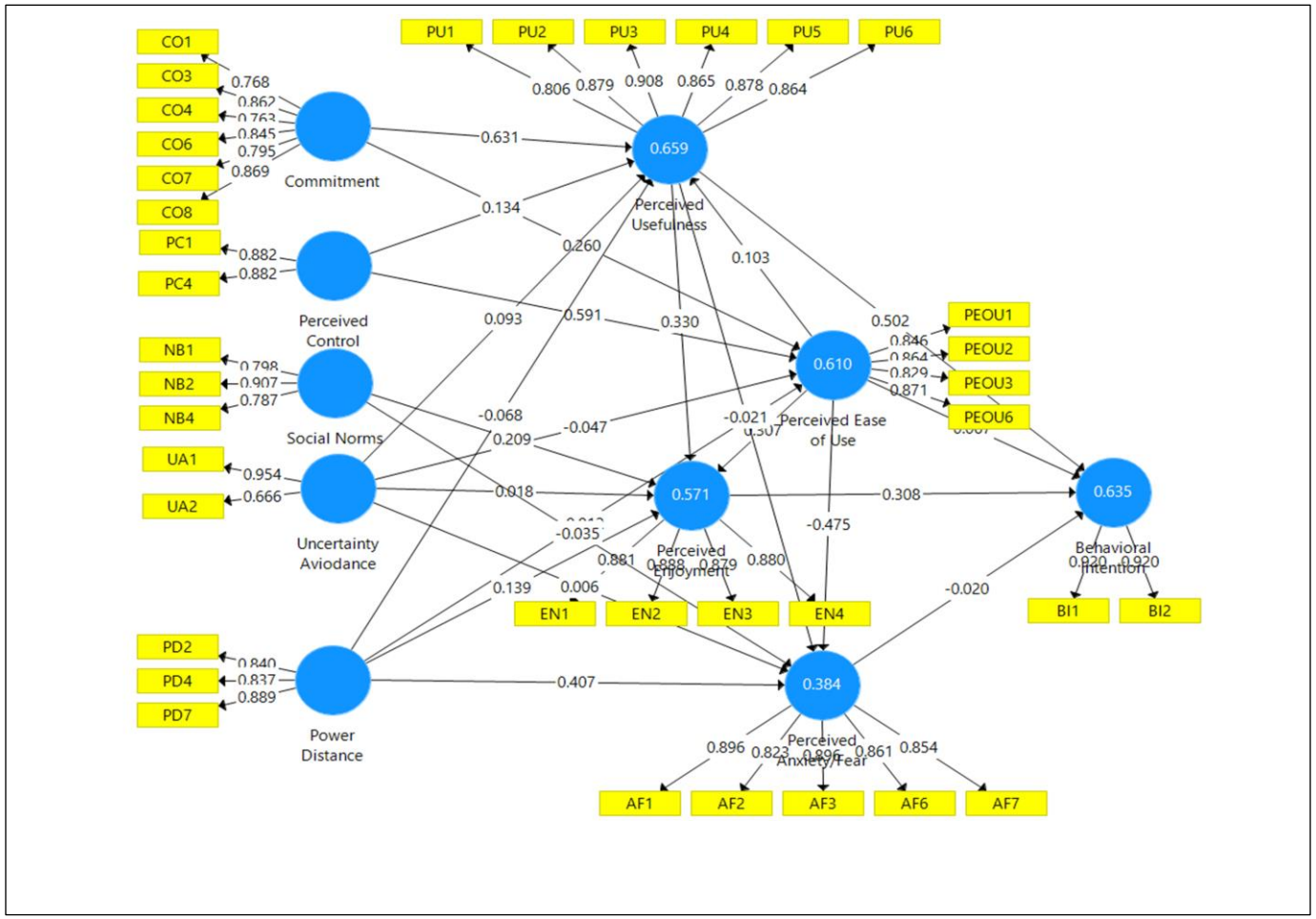

Model 2 Testing

SEM-Partial Least Square (PLS) path analysis and T-statistics were used to evaluate the proposed research model and the relationships among the constructs. Table 10 shows the overall results of the study. The model shows 64% of the explained variance in a user's behavioral intention, which, in general, exceeded the results of previous user technology acceptance and use research (Chuttur, 2009). Three constructs, perceived usefulness, perceived usefulness, and perceived enjoyment, supported the hypothesized relationships to a user's behavioral intention, but not the construct of perceived ease of use. 66% of the explained variance of perceived usefulness was presented by the supported constructs of commitment and uncertainty avoidance, but not from the constructs of perceived ease of use, perceived control, and power distance. 61% of the explained variance of perceived ease of use was presented by the supported constructs of perceived control and commitment, but not from the cultural constructs of power distance and uncertainty avoidance. 38% of the explained variance of perceived anxiety/fear was supported by the constructs of perceived ease of use and power distance, but not by the constructs of perceived usefulness, social norms, and uncertainty avoidance. 57% of the explained variance of perceived enjoyment was supported by four constructs, perceived usefulness, perceived ease of use, social norms, and power distance but not by uncertainty avoidance. Power distance was a stronger cultural predictor than uncertainty avoidance on emotional factors (enjoyment and anxiety/fear) and emotional factors both had significant effects on a user's behavioral intention. Two models have shown the same explaining variance on a user's behavioral intention to use at 66%. However, in model 2, now the hypothesis of that a user's perceived anxiety/fear has an effect on a user's behavioral intention to use is supported.

Dependent Variable	Independent Variable(s)	R^2	β	Hypothesis Supported
Behavioral Intention		0.64		
	Perceived Usefulness (PU)		0.50***	Yes
	Perceived Ease of Use (PEOU)		0.07	No
	Perceived Enjoyment (EN)		0.31***	Yes
	Perceived Anxiety/Fear (AF)		-0.02***	Yes
Perceived Usefulness		0.66		
	Commitment (CO)		0.63***	Yes
	Perceived Control (PC)		0.13	No
	Perceived Ease of Use (PEOU)		0.10	No
	Power Distance		-0.07	No
	Uncertainty Avoidance		0.09*	Yes
Perceived Ease of Use		0.61		
	Commitment (CO)		0.26***	Yes
	Perceived Control (PC)		o.59***	Yes
	Power Distance		-0.01	No
	Uncertainty Avoidance		-0.05	No
Perceived Anxiety/Fear		0.38		
	Perceived Usefulness (PU)		-0.02	No
	Perceived Ease of Use (PEOU)		-0.48***	Yes
	Social Norms (NB)		-0.04	No
	Power Distance		0.41***	Yes
	Uncertainty Avoidance		0.01	No
Perceived Enjoyment		0.57		
	Perceived Usefulness (PU)		0.33***	Yes
	Perceived Ease of Use (PEOU)		0.31***	Yes
	Social Norms (NB)		0.21*	Yes
	Power Distance		0.14**	Yes
	Uncertainty Avoidance		0.02	No

* Significant is at $p < 0.1$

** Significant is at $p < 0.05$

*** Significant is at $p < 0.01$

Table 20: Model Testing Results (Model 2)

2.5 Implication and Conclusion

Discussion

Our findings suggest the promise of two meaningful cultural dimensions, uncertainty avoidance and power distance, in a deeper understanding of technology acceptance and use. The Technology Acceptance Model (TAM) by Davis (1989, 1991) has paved a significant cognitive and rational model describing one's belief in technology acceptance and use. Nevertheless, the majority of technology use and acceptance research left out the role of emotion. A recent study (Marangunić, and Granić, 2015) on TAM has also indicated that emotional factors should be granted for more attention to have "a deeper understanding of factors contributing to TAM variables" (p. 90). On top of that, in this study, we have explored the cultural impact on one's cognition and emotion, because we believe that cultural factors would have a significant influence on one's rational and irrational state of mind and subsequently determine one's behavioral intentions and behaviors, especially under the context that enterprise information systems are nowadays used by heterogeneous users from different cultural backgrounds.

Prior research has shown that cultural differences have played a determining role on how people perceive, think, react, and behave. We predicted that cultural factors would be antecedents of one's cognition and emotions. In building our research model, we utilized and integrated TAM's perceptive factors as a foundation and hypothesized that cultural factors (using Hofstede's four cultural dimensions) would have significant effects on one's beliefs (perceived ease of use and perceived usefulness) and emotional perceptions (perceived anxiety/fear and perceived enjoyment), and those would have an impact on one's behavioral intentions, in terms of one's use of ERP systems (SAP). Our findings are twofold; first that our study results have shown that emotional factors (perceived anxiety/fear and perceived enjoyment) did have

significant effects on one's behavioral intentions in technology use and thus supported our hypotheses, and second, not all Hofstede's four cultural factors demonstrated significant influence on one's cognition and emotions (power distance and uncertainty avoidance showed a significant impact in the model).

Implications for Research

The implications for research are twofold: 1) cultural factors we have raised an awareness using a different lens to look at technology use, and 2) emotional factors have a determining impact on one's behavioral intention in technology acceptance and use, and deserve a more in-depth investigation. We surmise that emotions could overtake one's cognition in their influence on user's behavioral intention and behaviors. Anxiety and/or fear are strong deterrents to keep technology users from rationally and logically evaluating the technology to form their perceptions. Our findings have shown that both positive and negative emotions (with TAM's perceived usefulness and perceived ease of use) have strong effects on one's behavioral intention (predictive variance at 64%) and that cultural factors are important antecedents affecting one's cognitive and emotional state of mind. Cultural and emotional factors are often studied in anthropology, sociology, managements, consumer behavior, and many other disciplines, but seldom in the area of technology adoption and use. Our research model and findings have shown the imperatives and we believe that both culture and emotions should gain more attention in this stream of research.

Implications for Practice

Implications for practitioners include understanding the negative forces impairing a user's technological adoption and use would give organizational decision makers and managers

better insights on how to prevent future failure of a new technology implementation. In particular, our findings have unveiled what the specific negatives are; both perceived anxiety/fear and uncertainty avoidance, and reducing those negative factors should increase the success of an information technology project. Another cultural factor also provided an interesting perspective (the factor of power distance), that the disparity of a user's perceived power and inequality could impact a user's behavioral intentions and behaviors. In all, we suggest that the management of an organization should find ways to reduce the negative emotional and cultural factors to ensure a future success of a new technology implementation.

2.6 Limitations and Future Directions

Limitations

The first limitation is using student respondents. Student subjects are not necessarily ideal participants for the study, but they represent a population of future users. In our particular context, Enterprise Resource Planning (ERP-SAP), students were taught in class about the nature of the technology, the extended complexity of the technology, and the importance of it to an organization. They have also experienced a simulated ERP-SAP game in a lab. We are hoping that we have accurately or closely captured their responses.

The second limitation is that we only measured a user's behavioral intentions, but not actual use of an Enterprise Resource Planning (ERP-SAP) system. We surmised that if we have a chance to survey office worker respondents, who actually use/operate a SAP system, we might be able to measure their behavioral intention to actual use in a more realistic environment.

The third limitation is the various and ambiguous definitions of our cultural and emotional constructs. Both are hard to grasp and measure in a consensual way, and therefore our

findings may constitute as a case study or another exploration. Nevertheless, we have explored a different lens to gain a deeper understanding that cultural and emotional factors should earn a crucial place in technology acceptance and use research stream.

The fourth limitation is that a person's cultural dimensions are considered built-in personal factors, which could not be manipulated, increased or decreased. Therefore, the relationships between cultural dimensions and dependent factors, cognitive and emotional factors, were hypothesized to investigate the comparative and directional relationships.

Another limitation is that we did not calculate the effect size. Our sample size was 126, which was not large enough to pose a false statistical significance. Nevertheless, we believe that our hypothesis testing results have supported the data analysis in this study.

Future Directions

Hofstede's four cultural dimensions have been a well-recognized and regarded measuring tool in exploring the impact and relationship between culture and human behaviors. Our findings have shown that not all four cultural dimensions have posed equal significance, which prompted us to consider different aspects of culture, such as organizational culture. Another direction is that we might look into what culture change can impact a user's attitude and perception on technology acceptance and use, since the fabric of the workforce is more international now. Hofstede's fifth cultural dimension, long term orientation, was not included in our study. This long-term versus short-term orientation could be integrated and developed into a longitudinal study, which may yield a better in-depth result.

In this study, we looked at cultural factors as direct effects. Another future direction is to investigate cultural factors as indirect effects. Prior research (Srite and Karahanna, 2006) has shown moderating effects of Hofstede's cultural dimensions on technology acceptance and use.

Behavioral research in technology acceptance and use has evolved over time. The Technology Acceptance Model (TAM) (Davis, 1989) has proven a logical explanation on how a user perceived an IT. However, emotional factors have been neglected or treated lightly in terms of in the technology acceptance and use research. We would like to explore more specific emotional factors, such as fear, anxiety, and uncertainty. We suspect that these depend on the circumstance a person faces; emotional factors may have a determining significance on one's decision makings and behaviors. What we feel is as important as what we think, and sometimes what we feel overlooks and dictates over what logic is.

III. CHAPTER 3: COGNITION UNCERTAINTY, EMOTION UNCERTAINTY, AND ANTICIPATORY ANXIETY ON TECHNOLOGY USE

3.1 Introduction

Uncertainty adversely impels one's logical judgments, decisions, and behaviors (Baker, Bloom, Davis, 2015: Bloom, 2009; Denis and Kannan, 2013). The 2008 finanical crisis has shed an imperative factor, investors' uncertainty, into the light, and the effects of investors' uncertainty have shaken the global economy as a result (Bekaert, Hoerova, and Duca, 2013; Drechsler, 2013; Nelson and Katzenstein, 2014). Uncertainty often occurs when one could not foresee the possibility of a positive or favorable future outcome. Many factors and characteristics, such as attitude, perceptions (Davis, 1989), trust (Gefen, Karahanna, and Straub, 2003), image (Venkatesh and Davis, 2000; Venkatesh, 2000), anxiety, enjoyment, and motivation (Venkatesh and Bala, 2008) have been studied in the technology acceptance and use literature. The existing trend of behavioral research in technology acceptance and adoption has followed this train of thought, that humans are cognitively logical. However, there is little research that has looked into how uncertainty influences a user's technology acceptance and use. We, humans, make logical assessments and rational evaluations, and the products of these cognitive judgments become our beliefs and attitudes. Thus, beliefs and attitudes shape our behavioral intention to act. We believe that one of the essential characteristics of technology acceptance and use that has been understudied is the concept of uncertainty.

A source of uncertainty is "inability to predict the future, especially if the doubt centers on the experience of potentially unpleasant events like punishment, physical harm, failure, or rejection" (Kagan, 1972, p. 54). We surmise that office workers often face this kind of challenge

and doubt, when they cannot predict if they could master a technology or information system that their firm uses. We are interested in the role of uncertainty and the combined influence of uncertainty and anticipatory anxiety on technology use. Our research questions are threefold, investigating 1) the impact of a user's uncertainty factor on a user's perception on technology use, and 2) the relationship between cognition and emotional uncertainty, and 3) if and how emotional uncertainty affects anticipatory anxiety. Prior literature on uncertainty has mainly focused on in the economic discipline, especially on the relationships between uncertainty and economy (Bernanke, 1983; Bloom, 2014; Pratt, Blake, and Swann, 2013) and how uncertainty impels investors' behaviors (Alexopoulos, and Cohen, 2015; Da, Engelberg, and Gao, 2015). Uncertainty is an ambiguous concept (Monat, Averill, and Lazarus, 1972), but uncertainty also "constitutes as a powerful stressor" (Greco and Roger, 2001, p. 520) on human behaviors. Nevertheless, research in technology acceptance and use should not ignore uncertainty's impact on a person's perception and behaviors. The present study is aimed at investigating how users would feel along with what they would think, and how they would act, given an ambiguous event when the office workers are given a new technology or information system to use in their workplace. We also explore another factor, anticipatory anxiety, which is potentially induced by uncertainty. Together, we believe that uncertainty and anticipatory anxiety would be among the antecedents on user's behavioral intention.

One of the contributions of this study is in an effort to demonstrate how the concepts of uncertainty and anticipatory anxiety, which are often seen as ambiguous factors, can impact office workers' behavioral intentions and behaviors on using an enterprise information system. While the Technology Acceptance Model (TAM) by Davis (1989) has been widely adopted and used, it has shown limited explanatory and predictive power (Chuttur, 2009). We believe that by

investigating a person's uncertainty and anticipatory anxiety due to unforeseen/unpredicted circumstances and outcomes could lend to a wider perspective and better understanding to predict and explain a user's behavioral intention and use. While firms understand the impact of workers' uncertainty and anxiety, they could find ways to reduce or eliminate those uncertainties and negative emotions, anxiety, to ensure the success of their enterprise system's implementation.

3.2 Theoretical background and Hypotheses Development

The notion of uncertainty has not been a focal subject in terms of the study of technology acceptance and use. Prior literature on the concept of uncertainty has mainly focused on the macro-economy, finance, and psychology disciplines; the relationships between uncertainty and economy (Bernanke, 1983; Bloom, 2014; Kose and Terrones, 2012; Pratt, Blake, and Swann, 2013), how uncertainty impels investors' behaviors (Alexopoulos and Cohen, 2015; Da, Engelberg, and Gao, 2015), and how uncertainty reflects in the interpersonal contexts in psychology (Afifi and Afifi, 2015). On an individual level, uncertainty is an important factor to determine a person's behaviors. Afifi and Afifi (2015) stated that uncertainty is "variously defined but generally reflects one of two conceptualizations: one focused on a perceived inability to predict behaviors, attitudes, or outcomes, and the other focused on a perceived inability to understand the meaning behind particular attitudes, behaviors, or outcomes" (p. 1). Behavioral research on user's technology acceptance, adoption, adaption, and diffusion has presumptuously granted a person's logical and rational assessment in predicting and determining his or her technology use behaviors. The majority of research on technology use has focused on positive antecedents. The Theory of Reasoned Action (TRA) (Fishbein and Ajzen, 1975) and the Theory of Planned Behavior (TPB) (Ajzen, 1991), which was considered as an extension of TRA, both were presuming a user's cognition prior to deciding his/her behaviors. The Technology

Acceptance Model (TAM) (Davis, 1989; Davis, Bagozzi and Warshaw, 1989) has furthered this train of thought and successfully built a succinct model explaining a person's rational and cognitive assessment influencing his/her intention to behave, in the context of information system use. Innovation diffusion theory (IDT) (Rogers, 1983), TAM 2 (Venkatesh and Davis, 2000), and the Unified Theory of Acceptance and Use of Technology (UTAUT) (Venkatesh, Morris, Davis, and Davis, 2003), all maintain this assumption that humans are logical in determining their decisions and behaviors.

However, the explaining power of research based on TAM has been consistently low at around 40% (Chuttur, 2009). What was lacking? We suspect that there are under-investigated factors. We believe that uncertainty and anticipatory anxiety would provide a substantial addition to the knowledge of technology use. Individuals (office workers) face many challenges and stressors and that "people long to reduce their uncertainty in order to explain and predict the world around them" (Afifi and Afifi, 2015, p. 2). We believe that the concept of uncertainty and another uncertainty induced factor, anticipatory anxiety would provide a valuable lens to further and deeper look into the research of technology acceptance and use. There was limited research on how uncertainty and uncertainty-induced anticipatory anxiety affect a user's behavioral intention. This study will be focusing on how both cognitional and emotional uncertainty interact with user's technology acceptance and adaption when the new technology is work-related, which is more utility-oriented and in a mandatory environment.

Technology Acceptance Model (TAM)

In the past, information technology acceptance and adoption models have been drawn from sociology, philosophy, psychology, and social psychology and focused on a user's cognition, which is "driven by conscious decisions to act" (de Guinea and Markus, 2009, p. 433).

They have provided invaluable findings on how people perceive and ultimately act when facing a new technology at work. The fundamental assumption was that that people would make rational, conscious, and cognitive decisions. Davis's (1989 and 1991) Technology Acceptance Model (TAM) gave a simple yet logical explanation for the acceptance of new information technologies. Depending on a user's perceptions of usefulness and ease of use of a new technology, the perceptions would determine a user's behavioral intention and then use. If a user perceives a new information technology as both useful and easy to use in his/her work, he/she would have a higher tendency or probability (behavioral intention) to use that technology. TAM (Davis, 1989; Davis, Bagozzi and Warshaw, 1989) has been a seminal research model in explaining and predicting a user's intention to use a new technology in an office setting. However, when an office worker is given a new technology to use, he or she does not necessarily have a choice to either to use that technology or not. On the contrary, a worker may feel challenged or threatened using the new technology/information system when it is required for him/her to use it. Research has shown that "ambiguity and uncertainty are certainly conceptually linked" (Greco and Roger, 2001). When office workers are facing an ambiguous or unpredicted event (in our research context, using a new technology or an information system at a workplace), uncertainty and subsequent anticipatory anxiety may have a significant role as to how workers perceive the technology.

We believe that humans are complex, and often do not act logically or reasonably because we also have emotions and other murky existing thoughts which may play significant role on how we behave. The theme of Davis' TAM is based on the assumption that one's reasoning is solely reliant on cognition: if perception is positive, it would lead to positive behavioral intentions, and thus to actual behaviors. Nevertheless, TAM has provided a profound

foundation on explaining a user's technology acceptance intentions and behaviors. We utilize TAM's three constructs, perceived ease of use, perceived usefulness, and behavioral intention, as a base in our research model. These relationships have been well argued and proven in many previous studies and will only be presented briefly here. Thus:

H1: An increase in perceived usefulness (PU) would increase a user's behavioral intention to use (BIU).
H2: An increase in perceived ease of use (PEOU) would increase a user's behavioral intention to use (BIU).
H3: An increase in perceived ease of use (PEOU) would increase a user's perceived usefulness (PU).

Uncertainty

"As far as the laws of mathematics refer to reality, they are not certain; and as far as they are certain, they do not refer to reality." - Albert Einstein[5]

What is reality? Even mathematics cannot be certain on reality. What is the impact of uncertainty on one's reality? Humans are complex, both rational and emotional. Jurado, Ludvigson, and Ng (2013) stated that "uncertainty is typically defined as the conditional volatility of a disturbance that is unforeseeable from the perspective of economic agents" (p. 1177). Kagan (1972) stated that "if the representation is of a desired experience whose realization is uncertain, the person becomes motivated to resolve the uncertainty" (p. 54). When an office worker is facing a new seemingly complicated or challenging information system, which his/her company just implemented, more than likely, he/she would face an uncertainty of whether he/she could master or like the new situation. Furthermore, "uncertainty is considered a key dimension of everyday behavior that has a significant influence on decision-making" (Mushtag, Bland, and Schaefer, 2011, p. 1). We, as humans, probably face different degrees of uncertainty in our daily life; we can certainly experience the impacts and effects of uncertainty

[5] Address to Prussian Academy of Science in Berlin on 27 January 1921

on our decision makings and actions. For researchers, the challenge has always been to empirically measure uncertainty and its effects on our cognition, emotions, and behaviors.

We believe that uncertainty has a determining impact on a person's cognitive reasoning, perceptions, decision-makings, and behaviors. Following Lazarus and Foreman's Appraisal Theory or Cognitive Appraisal Theory of Emotion (1984) or Appraisal Theory, we suggest that both human's cognition and emotions play a role on uncertainty. In our study, we would define uncertainty in two aspects, cognitive and emotional uncertainty. Previous study (Greco and Roger, 2001) has measured uncertainty in two forms, cognitive and emotional uncertainty, which coincided with our earlier belief that we believe that humans are both cognitive and emotional. Thus, the following concept of uncertainty, we are looking at the impacts of cognitive and emotional uncertainty.

Cognitive Uncertainty

Horobin and Acredolo's study (1989), titled: "the impact of probability judgments on reasoning about multiple possibilities", was one of the best conceptualizations off cognitive uncertainty. Because when a person goes through probability judgments on reasoning about multiple possibilities, he/she may encounter unforeseeable or unpredictable outcomes, which he/she may or may not prefer. The impact of cognitive uncertainty could pose a significant determination towards a user's attitude and beliefs regarding technology acceptance and use. A new technology presumptively suggests a new, unknown, or unpredicted situation to workers, cognitive uncertainty deserves a close investigation. Trope and Liberman (1996) described that cognitive uncertainty is a subjectively perceived state of "low prior confidence" concerning the accuracy or relevance of one's knowledge about a new situation (p. 256). Antonsen, Thunberg, and Tiller (2010) further described cognitive uncertainty as "connected to low initial confidence

in using one's personal skills in handling a new situation" (p. 475). Cognitive uncertainty arises when an office worker is given a new technology to use in a workplace. He or she would be subjectively evaluate or assess his/her own cognitive ability to utilize that technology to do his/her job. TAM's (Davis, 1989 and 1991) perceived usefulness and perceived ease of use variables are integrated as a user's perception, especially as a positive perception. Using Horobin and Acredolo's (1989) cognitive uncertainty concept, which are "probability judgments on reasoning about multiple possibilities" (p. 183), we believe that when probability judgments on reasoning are unstable, they would act as a negative force on one's perception on technology acceptation and use. Both perceived usefulness and perceived ease of use were theorized that increased perception leads to increased effect on a user's behavioral intention. We believe that an increase in probability judgments on reasoning, cognitive uncertainty, would negatively impact on a person's perceptions. Thus:

H4a: An increase in cognitive uncertainty (CU) would decrease a user's perceived usefulness (PU).
H4b: An increase in cognitive uncertainty (CU) would decrease a user's perceived ease of use (PEOU).

Emotional Uncertainty

Prior research has examined "the effects of emotions, moods, and effect on judgment and information processing" (Tiedens and Linton, 2001). Forgas's (1995) Affect Infusion Model (AIM) has suggested that effects of emotions could significantly influence one's judgements. Greco and Roger (2001) concluded that "emotional uncertainty constitutes a maladaptive coping style, where subjects would respond to uncertainty with anxiety and sadness" (p. 530). Prior studies on the relationship between emotions and IT use have shown significant links, positive emotions such as enjoyment (Chin and Gopal, 1995; Davis et al, 1992; Koufaris, 2002;

Venkatesh et al, 2003; Venkatesh, 2000), happiness (Beaudry and Pinsonneault, 2010; Cenfetelli, 2004), and satisfaction (Bhattacherjee, 2001), as well as negative emotions such as anxiety (Brown et al, 2004; Cenfetelli, 2004; Compeau and Higgins, 1995; Compeau and Higgins, and Huff, 1999; Todman and Monaghan, 1994; Venkatesh et al, 2003; Venkatesh, 2000; Webster and Martocchio, 1992) and fear (Cenfetelli, 2004). Both positive and negative emotions could generate a mixture of force, which induces a certainly degree of emotional uncertainty. We feel that emotional uncertainty could have a detrimental impact on reasoning and cloud on one's judgments. Like we have discussed earlier, emotional uncertainty is considered the other side of uncertainty. We believe and hypothesize that emotional uncertainty would have a negative effect on a user's perception in technology use. Thus;

H5a: An increase in emotional uncertainty (EU) would decrease a user's perceived ease of use (PEOU).
H5b: An increase in emotional uncertainty (EU) would decrease a user's perceived usefulness (PU).

Appraisal Theory (Cognitive Appraisal Theory of Emotion)

Lehrman (1964) studied animal behaviors, from which he suggested that animal behaviors and behavioral patterns are built and/or incubated from interactions of three elements: environmental, internal, and social elements. Environmental factors are external stimuli; internal factors are personality, cognition, and emotions; social factors are an individual's learning and imitating ability from others. Based on this stream of theories and research, we believe that these three elements from Lehrman's study have paved the foundation for investigating people's cognitive appraisal processes and subsequently lead to behaviors. In this study, we surmise that a user's intention and use are driven by both his/her "rational calculations" and "a set of affective or emotional responses" (de Guinea and Markus, 2009). We followed Lazarus and Folkman's

Cognitive Appraisal Theory of Emotion (Appraisal Theory) (1984), and assumed that cognition is an antecedent of emotion. Lazarus and Folkman's Cognitive Appraisal Theory of Emotion (1984) (Appraisal Theory) has raised an important framework that we, humans, often assess and evaluate relevant to "what is it in for me". Under this concept, the appraisal process is saying that we appraise the potential outcomes, which impact how we feel, and how we feel impacts how we behave, and how we behave impacts the outcomes. Inherently, the appraisal process is a circular process, but here, we have to define antecedents and consequences to prevent an endless loop (Lazarus and Folkman, 1984). Following the Appraisal Theory's reasoning, emotion is a product of a person's cognitive appraisal. We hypothesize that cognitive uncertainty would have a direct impact on one's emotional uncertainty. Thus:

H6: An increase in cognitive uncertainty (CU) would increase a user's emotional uncertainty (EU).

Anticipatory Anxiety

"Virtually every theorist in personality and psychopathology has found it necessary to incorporate anxiety, in one form or another, in formulations with regard to acquisition, stability, and change of human behavior" (McReynolds, 2015, p. 281). Lazarus and Averill (1972) defined anxiety as "complex syndrome of loosely intertwined component reactions" (p. 244). Studies have shown that anxiety may have played a crucial role related to negative emotion (Barlow, Chorpita, and Turovsky, 1996; Brown, Chorpita, and Barlow, 1998; Chorpita, Albano, and Barlow, 1998; Gray and McNaughton, 1996). Straube, Mentzel, and Miltner (2007) described anticipatory anxiety utilizing "waiting for spiders" as a metaphor. Anticipatory anxiety was described such that humans will estimate a possible future threat, danger, or other upcoming potentially negative event, which causes him/her anxiety (Barlow, 2000; Barlow, Chorpita, and

Turovsky, 1996; Behnke and Sawyer, 2000). We believe that this particular emotion, when provoked in an office setting, would play a determining role in enterprise system use research and could be seen as a negative force on the use of new enterprise software such as SAP. Anticipatory anxiety is described as "a complex combination of a future-oriented cognitive state, negative affect, and autonomic arousal" (Chua, Krams, Toni, Passingham, and Dolan, 1999, p. 563), Anticipatory anxiety occurs when people are facing an important event with uncertainty; they start filling their mind with worst case scenarios. "Anticipatory anxiety contributes to avoidance behavior" (Straube, Mentzel, and Miltner, 2007, p. 1427). How would anticipatory anxiety affect/impact a user's perception (perceived usefulness and perceived ease of use) in a mandatory setting? Following the prior research and findings, anticipatory anxiety is a form of "negative affect" (Chua, et al, 1999) and "affective distress" (Kagan, 1972). We believed and hypothesized that anticipatory anxiety would have a negative influence on a user's perception on technology acceptance and use. Thus:

H7a: An increase in anticipatory anxiety (AA) would decrease a user's perceived usefulness (PU).
H7b: An increase in anticipatory anxiety (AA) would decrease a user's perceived ease of use (PEOU).

When a person is in a state of uncertainty, "affective distress is likely to occur" (Kagan, 1972, p. 55), affective distress is a form of anticipatory anxiety. "One of the most important stimulus variables is uncertainty, often considered to be a key antecedent of anxiety" (Monat, Averill, and Lazarus, 1972, p. 237). Earlier, we have considered that anticipatory anxiety is as "a complex combination of a future-oriented cognitive state, negative affect, and autonomic arousal" (Chua, Krams, Toni, Passingham, and Dolan, 1999, p. 563). Based on our earlier definition of uncertainty that we measured uncertainty in two forms; cognitive and emotional uncertainty, we

believed that uncertainty is an antecedent of anxiety from previous studies. Earlier, Greco and Roger (2001) have concluded that "emotional uncertainty constitutes a maladaptive coping style, where subjects would respond to uncertainty with anxiety and sadness" (p. 530), which has stated a link between emotional uncertainty and anxiety. Thus, we hypothesized that an increase in uncertainty would increase the level of a user's anticipatory anxiety.

H8a: An increase in cognitive uncertainty (CU) would increase a user's anticipatory anxiety (AA).
H8b: An increase in emotional uncertainty (EU) would increase a user's anticipatory anxiety (AA).

Research Model

Figure 11: Research Model (Essay 3)

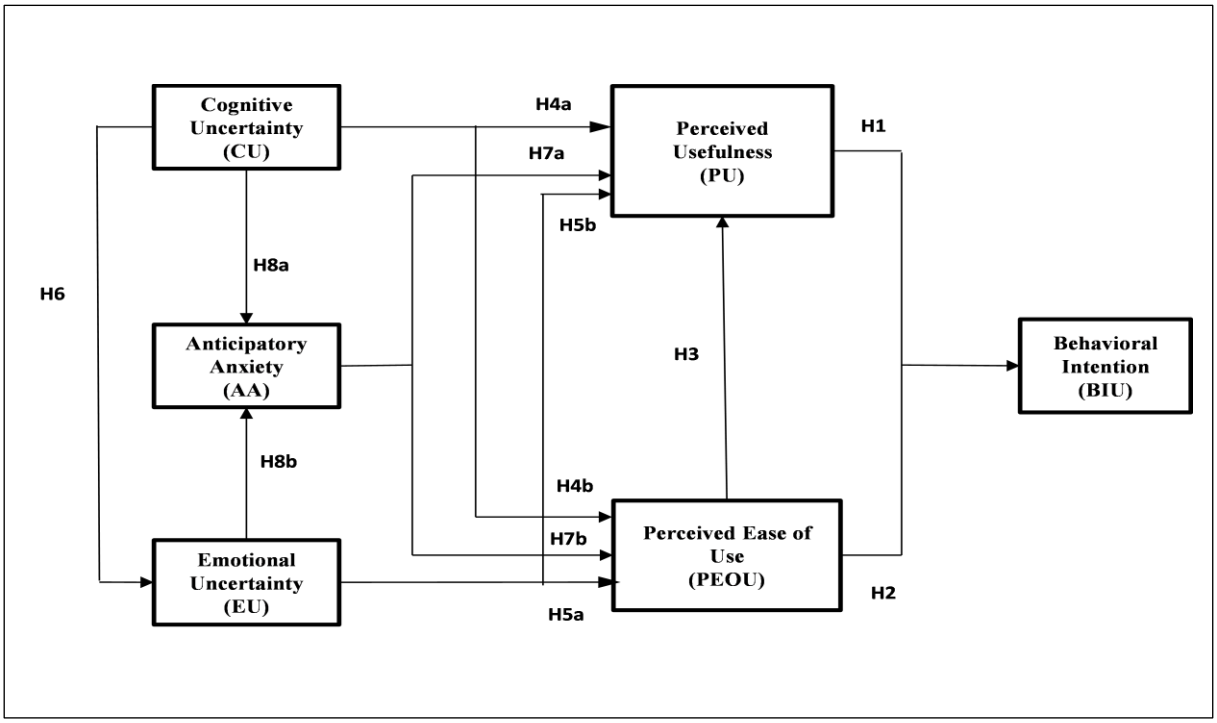

3.3 Research Methodology

Data Collection

In our online survey, we have created a stressful environment (scenario), where a possible outcome may be hazardous or harmful to one's standing in an office or his/her career if one does not excel in comprehending this technology (ERP-SAP). We would like to examine how an uncertainty, both cognitive and emotional uncertainty, and anticipatory anxiety could play an influential role affecting a person's intention and behaviors in technology use. The data for this study was collected and compiled using an online survey from two midsize universities, university one is located on the east coast and university two is in the Midwest in the U.S. The total usable subject number is 429. Both sets of survey respondents were taught the concepts of an Enterprise Resource Planning (ERP) system on why ERP is a crucial enterprise system software that many corporations are implementing and use nowadays. The questionnaire was organized into different sections to separate demographic information and behavioral constructs. A 7-point Likert scale was used to measure each measuring item (1=strongly disagree to 7=strongly agree). The questionnaire items are shown in Appendix 2. Demographics of the sample are shown in Table 21.

Table 21: Demographics

	Male	Female	Mean	Std. Deviation	Total
University One	72	53	1.42	0.496	125
University Two	174	130	1.43	0.495	304
Total	246	183			429

Instrument Development

In this study, we have utilized existing measuring items from previously published research. The measuring items for the emotional and cognitive uncertainty constructs were taken from Greco and Roger (2001), and items for the anticipatory anxiety construct were from Smith, Smoll, Cumming, and Grossbard's (2006) study. Perceived ease of use, perceived usefulness, and behavioral intention constructs are derived from Davis's TAM model and the measuring items are from (Davis, 1989).

3.4 Data Analysis

We used Structural Equation Modeling (SEM-PLS), which is a statistical technique, and has been widely adopted in social science research, to analyze our data. SEM incorporates two models, a structural model for testing causal relationships, and a measurement model for measuring each construct or latent variable. The main goal of SEM is to test and estimate causal relationships, thus to explain the variance of target dependent variables. The Partial Least Squares – Structural Equation Modeling (PLS - SEM) technique was used in this study. PLS is a form of the SEM method. PLS path modeling analyzes constructs or latent variables in a causal network, and then estimates explained variances.

Reliability and Validity Assessments

In order to assess the quality of the measurement model, we examined the reliability and validity of the constructs. The recommended acceptable reliability and validity assessments of this study are through the following criteria: 1) reliability (internal consistency) is demonstrated by composite reliability being greater than 0.70, 2) convergent validity is demonstrated by the average variance extracted (AVE) being greater than 0.50, and loadings in a confirmatory factor

analysis (CFA) being greater than 0.70, and 3) discriminant validity is evaluated by two criteria: the square root of the average variance extracted (AVE) greater than any of the inter-construct reliabilities, and that indicators' loadings are being greater than other indicators of other constructs' loadings (Fornell and Larcker, 1981) and of all indicators' (items) loading of one construct should be greater than all of its loadings on other constructs (cross loadings) (Chin, 1998; Fornell and Larcker, 1981). In addition, sample sizes for all four sections exceed the Cohen's (1992) recommended sample size (sample size > 58, at the 1% significance level, minimum $R^2 = 0.50$, and with four arrows point at a construct) in PLS-SEM.

The reliability (internal consistency) and the composite reliability of this study is shown in Table 22, all six constructs ranged from 0.81 to 0.93, which were above the 0.70 recommended level (Fornell and Larcker, 1981). AVE (Table 22) indices ranged from 0.55 to 0.80, which were above the 0.50 recommended level. Cross loadings (Table 23) from our confirmatory factor analysis table show that all measurement items ranged from 0.70 to 0.91. To assess the discriminant validity, we examined the square root of the average variance extracted (AVE), which should be greater than any of the inter-construct, and indicators' loadings should be stronger than other indicators of other constructs' loadings (Chin, 1998). All six constructs satisfied these two criteria, loadings from each construct were greater than loadings of other constructs and the square root of AVE of each construct (bold values) ranged from 0.86 to 0.96 on the diagonal of Table 22 and were larger than its correlation with other constructs, and the cross loadings were also satisfied (Table 23). Both Tables 22 and 23 have shown a satisfactory reliability and validity of all our measurement items in the model.

	Composite Reliability	AVE	Anticipatory Anxiety	Behavioral Intention	Cognitive Uncertainty	Emotional Uncertainty	Perceived Ease of Use	Perceived Usefulness
Anticipatory Anxiety	0.90	0.74	**0.86**					
Behavioral Intention	0.92	0.80	0.08	**0.89**				
Cognitive Uncertainty	0.81	0.58	0.33	0.26	**0.90**			
Emotional Uncertainty	0.92	0.57	0.68	0.06	0.40	**0.96**		
Perceived Ease of Use	0.88	0.55	0.03	0.68	0.24	0.03	**0.94**	
Perceived Usefulness	0.93	0.68	0.09	0.74	0.28	0.08	0.75	**0.96**
*Diagonal elements in the correlation of constructs matrix are the square root of the average variance extracted (AVE). For adequate discriminant validity, diagonal elements should be greater than corresponding off-diagonal elements.								

Table 22: Inter-Construct Correlations

	Anticipatory Anxiety	Behavioral Intention	Cognitive Uncertainty	Emotional Uncertainty	Perceived Ease of Use	Perceived Usefulness
AA02	0.83	0.14	0.24	0.55	0.04	0.10
AA03	0.89	0.05	0.33	0.62	0.04	0.10
AA04	0.86	0.01	0.29	0.59	0.00	0.02
BI01	0.07	0.91	0.21	0.05	0.62	0.66
BI02	0.07	0.89	0.25	0.05	0.59	0.66
BI03	0.07	0.89	0.25	0.06	0.63	0.65
CU01	0.24	0.22	0.79	0.30	0.19	0.22
CU03	0.27	0.16	0.76	0.32	0.16	0.19
CU08	0.25	0.22	0.74	0.29	0.19	0.24
EU01	0.47	0.04	0.31	0.76	0.03	0.01
EU02	0.53	-0.01	0.34	0.79	-0.04	0.03
EU03	0.54	0.08	0.34	0.83	0.04	0.10
EU04	0.57	0.04	0.27	0.74	0.02	0.06
EU06	0.52	0.02	0.35	0.75	0.08	0.12
EU07	0.54	0.06	0.19	0.73	0.04	0.05
EU08	0.45	0.11	0.36	0.74	0.10	0.11
EU10	0.49	0.01	0.26	0.72	-0.09	-0.03
PEOU01	-0.01	0.41	0.18	0.01	0.74	0.58
PEOU02	0.01	0.59	0.16	0.00	0.77	0.60
PEOU03	0.05	0.50	0.21	0.00	0.77	0.54
PEOU04	-0.01	0.51	0.12	0.01	0.76	0.52
PEOU05	0.07	0.57	0.22	0.05	0.72	0.59
PEOU06	0.03	0.45	0.17	0.08	0.70	0.51
PU01	0.09	0.58	0.21	0.05	0.59	0.81
PU02	0.05	0.63	0.20	0.04	0.62	0.82
PU03	0.12	0.61	0.23	0.10	0.64	0.84
PU04	0.10	0.56	0.27	0.08	0.60	0.80
PU05	0.05	0.65	0.26	0.06	0.63	0.84
PU06	0.03	0.60	0.23	0.04	0.64	0.82

Table 23: PLS Confirmatory Factor Analysis

Model Testing

SEM-PLS path analysis and T-statistics were used to evaluate the proposed research model and the relationships among the constructs. Table 24 shows the overall results of the study. The model presents a 58% explanation of the variance in a user's behavioral intention, which in general exceeded the results of previous technology acceptance and use research. The relationships from the TAM model (H1, H2, and H3) (Davis, 1989 and 1991), which have been tested in many previous studies, were also satisfied in our model. Cognitive uncertainty has shown a significant influence on both a user's perception, perceived usefulness and perceived ease of use, which supported our hypotheses (H4a and H4b). Anticipatory anxiety and emotional uncertainty have not shown an impact on a user's perceived usefulness (H5a, H5b, H7a, and H7b). Cognitive uncertainty showed an impact on emotional uncertainty, which supported our hypothesis (H6) and yielded 16% of explanatory variance. Emotional uncertainty had a significant impact on anticipatory anxiety, but not from cognitive uncertainty (H8a), which explained 47% of the variance. Overall, four factors yielded 58% explanatory power relevant to perceived usefulness. Cognitive uncertainty was shown to have a significant effect on a user's perception, perceived usefulness and perceived ease of use, and emotional uncertainty. However, cognitive uncertainty has not shown a significant influence on anticipatory anxiety, since we expected and it seemed to be a logical assumption that cognitive uncertainty would induce a user's anticipatory anxiety.

Independent Variable	Dependent Variable	R^2	β	P Values	Hypothesis	Hypothesis Supported
	Behavioral Intention	0.58				
Perceived Ease of Use -> Behavioral Intention			0.51	0.000	H2	Yes
Perceived Usefulness -> Behavioral Intention			0.30	0.000	H1	Yes
	Perceived Usefulness	0.58				
Anticipatory Anxiety -> Perceived Usefulness			0.04	0.392	H7a	No
Cognitive Uncertainty -> Perceived Usefulness			0.11	0.003	H4a	Yes
Emotional Uncertainty -> Perceived Usefulness			-0.01	0.796	H5b	No
Perceived Ease of Use -> Perceived Usefulness			0.04	0.000	H3	Yes
	Perceived Ease of Use	0.06				
Anticipatory Anxiety -> Perceived Ease of Use			-0.01	0.919	H7b	No
Cognitive Uncertainty -> Perceived Ease of Use			0.27	0.000	H4b	Yes
Emotional Uncertainty -> Perceived Ease of Use			-0.01	0.377	H5a	No
	Emotional Uncertainty	0.16				
Cognitive Uncertainty -> Emotional Uncertainty			0.40	0.000	H6	Yes
	Anticipatory Anxiety	0.47				
Cognitive Uncertainty -> Anticipatory Anxiety			0.07	0.095	H8a	No
Emotional Uncertainty -> Anticipatory Anxiety			0.65	0.000	H8b	Yes

Table 24: Model Testing Results (Essay 3)

Figure 12: Path Coefficients and R^2 (Essay 3)

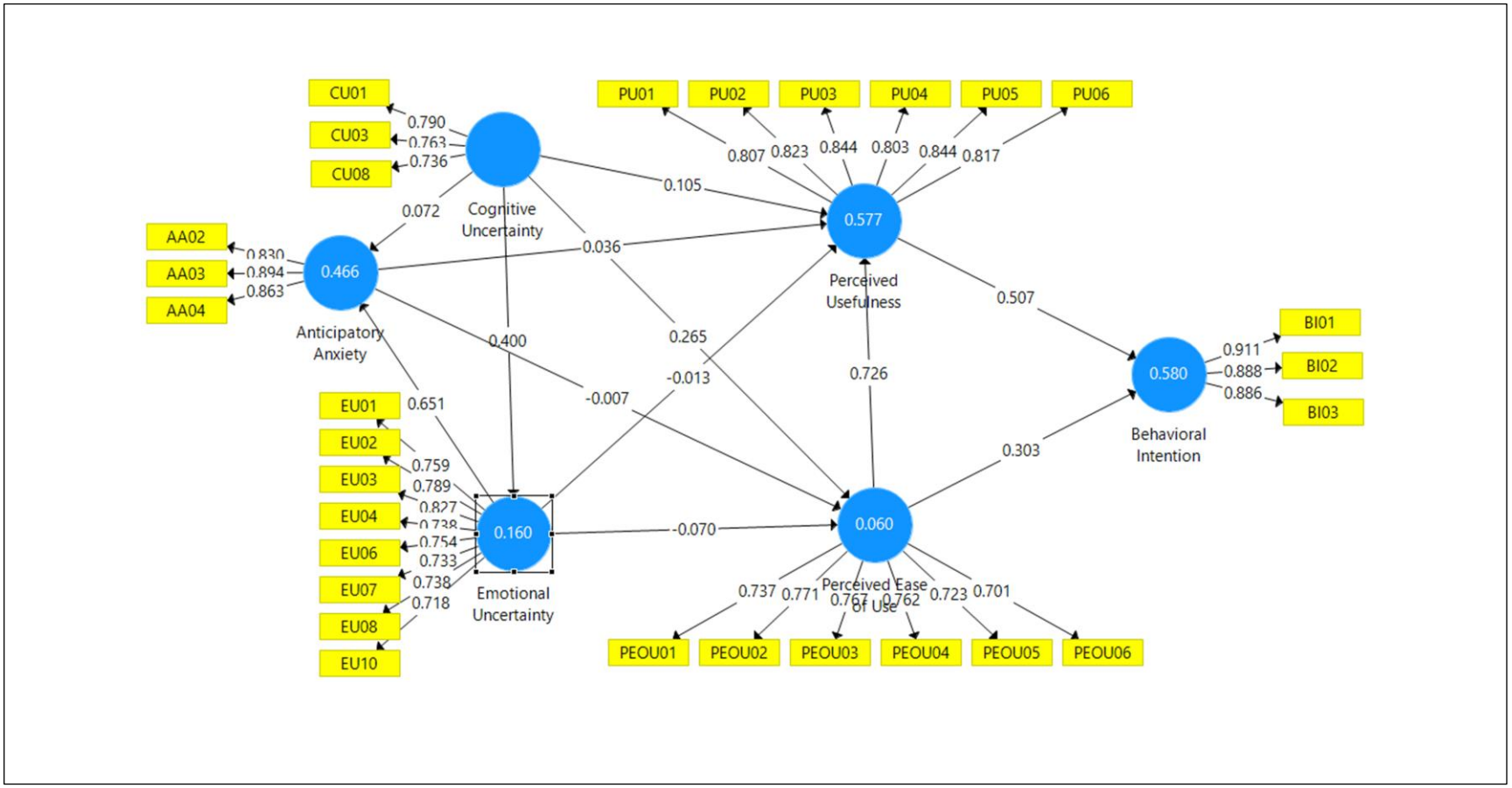

3.5 Discussions and Implications

Discussions

In this study, our research model followed the reasoning of Lazarus and Foreman's Appraisal theory (1984), which suggested that cognition is an antecedent of emotions and there are two phases of appraisals. The first phase of appraisal is "fight or flight", a person will appraise a situation as to whether that situation would endanger his/her wellbeing. The second phase of appraisal is coping, a person would appraise/evaluate if he/she has sufficient skill sets to cope with the new situation. Another important concept from Appraisal Theory is that emotions came after a person's cognitive appraisal, in which gives us a reasonable support on defining the relationship between cognition and emotions. We have also explored the concept of uncertainty, which is a very possible product after a person's appraisal, especially when an office worker was given a seemly difficult or challenging technology (ERP-SAP) to use. Further, we also looked the impact of anticipatory anxiety, which according to prior research findings that uncertainty induces an "affective distress" or "negative affect", which we considered a form of anticipatory anxiety. We have presented a logical nomological net explaining why cognitive uncertainty, emotional uncertainty, and anticipatory anxiety are antecedents of a user's perceptions on technology acceptance and use.

We began our research to explain two questions: 1) if a user's uncertainty (cognitive and emotional) would impact his/her perceptions/beliefs (perceived usefulness and perceived ease of use) on technology acceptance and use, and 2) if an uncertainty induced stressor (anticipatory anxiety), which would also impact a user's perceptions on technology acceptance and use. In general, our research model has shown a 58% predictive variance on a user's behavioral intention. Cognitive uncertainty was shown to be a significant influence on a person's perceived

usefulness and ease of use, since cognitive uncertainty is a "subjectively perceived state of "low prior confidence" concerning the accuracy or relevance of one's knowledge about a new situation" (Trope and Liberman, 1996, p. 256). When an office worker is: 1) not sure about a new technology, 2) concerned that if he/she has the capability to understand it, and/or 3) feeling that if he/she does not the skill sets to master it, all of those may have caused a user's uncertainty. We did not find and were disappointed that emotional uncertainty and anticipatory anxiety did not show significant influence. We believed that cognitive and emotional uncertainty, and along with the concept of uncertainty induced stressor or negative affect, anticipatory anxiety, should be granted more attentions in the research stream of technology acceptance and use. We, humans, are not all logical. We are both logical and emotional and the combination and interplay of those two elements make up our behavioral intentions and behaviors.

Implications for Research

For research implications, there are various forms of "uncertainty (insufficient, overwhelming, and conflicting information, and perhaps an intimation of the unknowable" (Babrow and Matthias, 2015, p. 10) which make this study particularly challenging. The theory of Problematic Integration by Babrow (1992) proposed that "humans are continually constructing and reconstructing the meanings of their experience,.., in the form of "probabilistic" and "evaluative orientations"" (Babrow and Matthias, 2015, p. 10). We believe that the concepts of "probabilistic" and "evaluative orientations" coincide with the idea that humans cognitively appraise their surroundings from Lazarus and Foreman's Appraisal Theory (1984). In our study, users of an enterprise information system perhaps would constantly and continuously evaluate and appraise their environment, in which both their uncertainty and anticipatory anxiety may be

dynamically increased or reduced, and such, makes our study more challenging and exciting at the same time.

Uncertainty is an underexplored concept in technology acceptance and use research. We have reviewed the literature in psychology, social psychology, economy, finance, and technology acceptance. A recent metadata study on TAM from 1986 to 2013 has concluded that "even though TAM has already helped in explaining technology acceptance, a deeper understanding of factors contributing to TAM variables is required" (Marangunić, and Granić, 2015, p. 90). We believe that we have found meaning factors, uncertainty and anticipatory anxiety, which could contribute to a deeper understanding in technology acceptance and use. We have utilized Davis' (1989) Technology Acceptance Model (TAM) as a fundamental framework and incorporated Lazarus and Foreman's (1984) Cognitive Appraisal Theory of Emotion (or Appraisal Theory) to build up our research model and supported the relationships among the constructs. Cognitive uncertainty has proven an imperative antecedent to a user's perceptions on technology acceptance and use. Although emotional uncertainty and anticipatory anxiety have not shown significant impacts in our current study, we strongly believe that all three constructs deserve further investigation and research.

Implications for Practice

For practical implications, we believe that we have explored and proposed some exciting factors, cognitive and emotional uncertainty, and anticipatory anxiety, which may influence a user's state of mind, and affect his/her perception, behavioral intentions, and ultimately behaviors in using an enterprise system (ERP-SAP). Staw (1986) stated that a happy worker is a most productive worker. Our study has looked at the opposite side, negative factors: uncertainty and anxiety. Our findings have shown that cognitive uncertainty has played an important role on

influencing a user's perceptions and behavioral intentions to technology acceptance and use. Now a firm's management can find ways to reduce or eliminate an office worker's cognitive uncertainty to ensure a successful ERP-SAP implementation and achieve a happy-productive worker relationship. Despite of that emotional uncertainty and anticipator anxiety have not shown a direct impact on a user's perception and behavioral intentions in answering our hypotheses, it only yielded more research which need further investigations of those effects. By understanding more on a worker's negative side of affects, a firm's management could create a "happy-productive worker" environment, and thus ensure a success of all information technology implementations.

In the study, we have investigated an important factor (uncertainty) and its byproduct (anticipatory anxiety) and their impact on the technology acceptance and use. Uncertainty is a novel concept in the current human computer interaction (HCI) research stream. The Technology Acceptance Model (TAM) by Davis (1989 and 1991) has followed a notion that positive beliefs (useful and ease of use) lead to positive behavioral intentions. We have found that cognitive uncertainty indeed is an antecedent of a user's perceptions and beliefs, and by that, we opened another door to see that an ambiguous concept and factor (uncertainty) has a significant impact on a user's beliefs, and its byproduct (anticipatory anxiety) may have a meaningful and necessary place in further exploration of technology acceptance and use research. The contribution of this study will shed light on discovering knowledge in a user's conflict when using new enterprise software, and thus enhance a better understanding for professionals when implementing it.

3.6 Limitations and Future Directions

Limitations

The first limitation is using student respondents. Student subjects are not necessarily ideal participants for the study, but they represent a population of future users. In our particular context, Enterprise Resource Planning (ERP-SAP), students were taught in class about the nature of the technology, the extended complexity of the technology, and the importance of it to an organization. They might not have the sense of urgency like an office worker that has to learn, use, and master that technology to do their job to succeed in the organization. Low or no sense of urgency may have created an obstacle in that we were trying to see how uncertainty and anticipatory anxiety would impact their perceptions of useful and ease of use.

The second limitation is that in our study is that we only measured a user's behavioral intentions, but not actual use of an Enterprise Resource Planning (ERP-SAP) system. We surmised that if we have our student subjects actually use/operate a SAP system, we might be able to measure their responses in our survey.

The third limitation is that since our online survey was asking about a fictitious situation, we may not have abled to create a sense of urgency about the situation to acutely measure a user's cognitive and emotional uncertainty or an "induced" anticipatory anxiety. There were several challenges in empirically examining the impacts of uncertainty and anticipatory anxiety on behaviors and their relation to the use of ERP-SAP. Another challenge was that uncertainty and anxiety were ambiguous concepts and it was challenging to create an environmental setting, in which uncertainty and anticipation could be acutely measured.

Another limitation is that we did not calculate the effect size. Our sample size was 429, which was not large enough to pose a false statistical significance. Nevertheless, we believe that our hypothesis testing results have supported the data analysis in this study.

Future Directions

Earlier, according to Lehrman (1964) studies on animal behaviors, he suggested that animal behaviors and their behavioral patterns are built and/or incubated from interactions of three elements: environmental, internal, and social. Our cognitive and emotional uncertainty measuring items seemed to be implicitly focusing on two of three of these elements, environmental and internal. Future studies could extend to the third element, social, and explore on how to reduce this type of uncertainty. We could develop new measurement items, which incorporate the social element into cognitive and emotional uncertainties to better define the concept of uncertainty. Nevertheless, we have seen the need to further this stream of research. By doing so, we might be able to better understand and explain the obstacles of implementing an enterprise information system.

IV. CONCLUSION

Much of technology acceptance and use research has separated human's emotion from cognition. Furthermore, little research has looked into how cognitive responses interplay with emotional responses and how both responses are formed. Despite the ongoing debates on the formation of emotion and the relationship between cognition and emotion, it is undeniable that human behaviors are significantly affected by emotions. The Theory of Reasoned Action (TRA) by Fishbein and Ajzen (1975) suggested that a person's attitude, which was defined as the positive or negative feelings (evaluative affect) about performing a target behavior, was one of

the determinant factors in predicting human behaviors. The elicited explanation of "attitude" from TRA is twofold: 1) emotions affect behaviors, and 2) emotions are evaluative (cognitive) affects. Research in a user's acceptance and adoption in information technologies (IT) or information systems (IS) have been predominantly assumed that a person's cognitive responses override his/her behavioral intention and subsequently lead to an action. Nonetheless, the effect of a person's emotional factor was often overlooked. We believe that in addition to cognition, emotions would have a substantial and complimentary impact on technology use research and practices.

Without a doubt, Davis's TAM (1989) has created an evolutionary and influential theme in the IS use research area. Its parsimonious model and measuring instrument have looked into IT users' internal cognitive minds. Stemming from socio-psychology, consumer behavior, and many theories, frameworks, and models from various fields and disciplines, various studies and theories on IT use were launched, learned, and published. Nevertheless, the majority of research perspectives often riveted on user's cognition; the assumption is that people would go through cognitive processes and make rational and logical decisions. Relatively little or scattered research has been directly aimed at testing whether emotions underlie a user's behavioral intention and their relationship with one's cognitions. The majority of technology use research and studies (e.g. Benbasat and Barki, 2007; Bhattacherjee and Hikmet, 2007; Chau and Hu, 2001, 2002; Kim, Chan, Chan, and Gupta, 2004; Kim, Chan, and Chan, 2007; Moore and Benbasat, 1991; Venkatesh, 1991; Venkatash and Davis, 1996, 2000) have followed TAM's footprints and validated the core constructs on this model. However, there was research that tapped into the non-cognitive side, for instance, trust (Gefen, Karahanna, and Straub, 2005), hedonistic IS (Hassenzahl, 2001; Van der Hejiden, 2004), fun and enjoyment (Carroll and Thomas, 1988; Chin

and Gopal, 1995; Davis, Bagozzi, and Warshaw, 1992; Koufaris 2002; Venkatesh and Bala, 2008), and affect and emotion (Beaudry and Pinsonneault 2005, 2010; Centfetelli, 2004; Venkatesh, Morris, Davis, and Davis, 2003; Zhang and Li, 2007; Zhang, 2013). Nevertheless, that prior research has not given a well-grounded reasoning of the relationship between cognition and emotion. In this study, we broaden the exploratory lens in user IT adoption and use; in particular, we look into a user's emotional side and under what circumstance emotions interplay with cognition and ultimately impact on one's behavioral intentions and behaviors.

Here we intend to investigate further what other factors impact people's determinant thoughts, intentions, decisions, and behaviors. The framework of our proposed research model is as follows. First, we utilized the existing and seminal model (TAM) as our cognition factor and grounded model. Second, Cognition of Appraisal Theory of Emotion (Lazarus and Folkman, 1984) or Appraisal Theory was introduced as our fundamental and logical building blocks, while commitment and perceived control from Appraisal Theory were the antecedents of cognitive factors. Third, in contrast to Venkatesh's TAM3 (2008), we believe that cognition affects emotions, which coincided with TRA's attitude concept (TRA defined attitude as a person's positive or negative feelings toward a target behavior). Lastly, we surmised that both cognition and emotion would impact a person's technology use. According to Lehrman's (1964) research on animal instinct, why animals did what they did, instinctual patterns are built from interactions of three elements: environmental, internal, and social. Environmental factors are external stimuli; internal factors are personality, cognition, and emotions; social factors are an individual's learning and imitating ability from others, and affective influences from the society. Based on this stream of theories and research, we believe that these three elements from Lehrman's study have paved the foundation on investigating people's appraisal process and subsequently lead to

behaviors. In this study, we surmise that a user's intention and use are driven by both his/her "rational calculus" and "a set of affective or emotional responses" (de Guinea and Markus, 2009).

Information systems (IS) research on the relationship between technology and a person's use has been a perpetual exploration and investigation for researchers. A primary goal of much this research stream is to discover and the determining factors that affect, motivate, promote, and/or lead to user's acceptance and use of a technology both in a positive or negative way. Regardless of what type of information system or technology an IT/IS developer produces, or a company chooses to implement, the ultimate goal is to achieve the user's maximum usage and efficiency. There are limited studies on how people's emotions affect their perception, intentions, and behaviors when the situation is different. To address this research gap, we set out to investigate how emotions impact on a user's technology acceptance and adaption. In all, the contribution of the three essays is to discern the role of emotion and the relationship with cognition in search of improved understanding and prediction of technology acceptance and use. Cognitive responses have been served as a dominating factor when predicting human behavior, and especially in the research of a person's information technology acceptance and usage. Without a doubt, the ability of thinking makes us, human beings, different from other animals. However, we cannot eliminate or neglect our emotional side and the impact of it toward our behaviors. We followed Lazarus and Folkman's Cognitive Appraisal Theory of Emotion (Appraisal Theory) (1984), and assumed the reasoning from Appraisal Theory that cognition is an antecedent of emotion. The implication for research and practice is that we distinguished that the role of emotion, which should not be excluded from studying and investigating human behaviors, is complementary to cognition. We successfully enhanced the explained variance, compared to technology acceptance model (TAM), of a person's technology use behavioral

intention, which has given proof that emotion did contribute significantly to this stream of research. Later, we explored how cultural factors, which are considered as a shared cognitive configuration, would impact a person's cognitive responses. Lastly we investigated uncertainty and an uncertainty induced emotion/stressor, anticipatory anxiety, and how they would impact a person's beliefs and behavioral intentions. We hope that all three essays could lend a different but crucial lens in studying technology acceptance and usage.

The contribution of this study is threefold; 1) Cognitive Appraisal Theory of Emotion (Lazarus and Folkman, 1984) to support the reasoning of the relationship between cognition and emotion in technology use research, 2) establish importance of the role of emotion impacting a person's behavioral intentions, and 3) enrich the explanation and prediction on technology use for researchers and practitioners. The overall study is not meant to be exhaustive in explaining and predicting IT use on the emotional side, as the field of cognition and emotion is already too complex and intertwined to be fully examined in one single paper. We are hoping this study raises another research angle, especially exploring in emotion factor, to provide a starting point in gaining a deeper and richer understanding of a person's IT use.

V. REFERENCES

Adams, D. A., Nelson, R. R., and Todd, P. A. (1992). Perceived usefulness, ease of use, and usage of information technology: a replication. *MIS Quarterly*, 227-247.

Adams, S. K., and Kisler, T. S. (2013). Sleep quality as a mediator between technology-related sleep quality, depression, and anxiety. *Cyberpsychology, Behavior, and Social Networking*, 16(1), 25-30.

Afifi, T., & Afifi, W. (Eds.). (2015). Uncertainty, information management, and disclosure decisions: Theories and applications. Routledge.

Agarwal, R., and Prasad, J. (1999). Are individual differences germane to the acceptance of new information technologies? *Decision Sciences*, 30(2), 361-391.

Agarwal, R., and Prasad, J. (2007). The role of innovation characteristics and perceived voluntariness in the acceptance of information technologies. *Decision Sciences*, 28(3), 557-582.

Ajzen, I. (1991). The theory of planned behavior. Organizational behavior and human decision processes, 50(2), 179-211.

Ajzen, I. and Fishbein, M (1980), Understanding attitudes and predicting social behavior, Englewood Cliffs, NJ: Prentice-Hall

Alexopoulos, M., and Cohen, J. (2015). The power of print: Uncertainty shocks, markets, and the economy. *International Review of Economics & Finance*, 40, 8-28.

Amoako-Gyampah, K., and Salam, A. F. (2004). An extension of the technology acceptance model in an ERP implementation environment. *Information and Management*, 41(6), 731-745.

Antonsen, Y., Arne Thunberg, O., & Tiller, T. (2010). Adaptive learning and reduced cognitive uncertainty in a financial organization. *Journal of Workplace Learning*, 22(8), 475-488.

Aral, S., Brynjolfsson, E., and Wu, D. J. (2006). Which came first, it or productivity? Virtuous cycle of investment and use in enterprise systems.

Aronson, Z. H., Shenhar, A. J., and Patanakul, P. (2013). Managing the intangible aspects of a project: The affect of vision, artifacts, and leader values on project spirit and success in technology-driven projects. *Project Management Journal*, 44(1), 35-58.

Babrow, A. S. (1992). Communication and problematic integration: Understanding diverging probability and value, ambiguity, ambivalence, and impossibility. *Communication Theory*, 2(2), 95-130.

Babrow, A. S., & Matthias, M. S. (2015). An application of problematic integration theory. uncertainty, information management, and disclosure decisions: Theories and applications, 9.

Bagozzi, R. P. (2007). The legacy of the technology acceptance model and a proposal for a paradigm shift. *Journal of the Association for Information Systems*, 8(4), 3.

Bagozzi, R. P., Gopinath, M., and Nyer, P. U. (1999). The role of emotions in marketing. *Journal of the Academy of Marketing Science*, 27(2), 184-206.

Bagozzi, R. P., Yi, Y., and Nassen, K. D. (1998). Representation of measurement error in marketing variables: Review of approaches and extension to three-facet designs. *Journal of Econometrics*, 89(1), 393-421.

Baker, S. R., Bloom, N., & Davis, S. J. (2015). Measuring economic policy uncertainty (No. w21633). *National Bureau of Economic Research*.

Bandura, A. (1977). Self-efficacy: toward a unifying theory of behavioral change. *Psychological Review*, 84(2), 191.

Bandyopadhyay, S., & Martell, M. (2007). Does attitudinal loyalty influence behavioral loyalty? A theoretical and empirical study. *Journal of Retailing and Consumer Services*, 14(1), 35-44.

Barbalet, J. M. (2001). Emotion, social theory, and social structure: A macrosociological approach. Cambridge University Press.

Barlow, D. H. (2000). Unraveling the mysteries of anxiety and its disorders from the perspective of emotion theory. *American Psychologist*, 55(11), 1247.

Barlow, D. H., Chorpita, B. R, & Turovsky, J. (1996). Fear, panic, anxiety, and the disorders of emotion. In D. A. Hope (Ed.), Nebraska Symposium on Motivation: perspectives on anxiety, panic, and fear (Vol. 43, pp. 251-328). Lincoln: University of Nebraska Press.

Basabe, N., Paez, D., Valencia, J., Gonzalez, J. L., Rimé, B., & Diener, E. (2002). Cultural dimensions, socioeconomic development, climate, and emotional hedonic level. Cognition & Emotion, 16(1), 103-125.

Bearden, W. O., Netemeyer, R. G., and Haws, K. L. (2011). Handbook of marketing scales: Multi-item measures for marketing and consumer behavior research. Thousand Oaks, CA: Sage Publications.

Beatson, A., Coote, L. V., & Rudd, J. M. (2006). Determining consumer satisfaction and commitment through self-service technology and personal service usage. *Journal of Marketing Management*, 22(7-8), 853-882.

Beaudry, A., and Pinsonneault, A. (2005). Understanding user responses to information technology: A coping model of user adaptation. *MIS Quarterly*, 493-524.

Beaudry, A., and Pinsonneault, A. (2010). The other side of acceptance: studying the direct and indirect effects of emotions on information technology use. *MIS Quarterly*, 34(4), 689-710.

Behnke, R. R., and Sawyer, C. R. (2000). Anticipatory anxiety patterns for male and female public speakers. Communication Education, 49(2), 187-195.

Bekaert, G., Hoerova, M., & Duca, M. L. (2013). Risk, uncertainty and monetary policy. *Journal of Monetary Economics*, 60(7), 771-788.

Bem, D. J. (1970). Beliefs, attitudes, and human affairs.

Benbasat, I. and Barki, H. (2007. "Quo vadis, TAM?", *Journal of the Association of Information Systems*, 8 (4), 211–218.

Benbasat, I., and Zmud, R. W. (2003). The identity crisis within the IS discipline: Defining and communicating the discipline's core properties. *MIS Quarterly*, 183-194.

Berkowitz, L. (1990). On the formation and regulation of anger and aggression: A cognitive-neoassociationistic analysis. *American Psychologist*, 45(4), 494.

Bernanke, B.S., (1983). Irreversibility, uncertainty and cyclical investment. Quarterly Journal of Economics 98 (1), 85–106.

Bhattacherjee, A. (2001). Understanding information systems continuance: An expectation-confirmation model. *MIS quarterly*, 351-370.

Bhattacherjee, A., & Hikmet, N. (2007). Physicians' resistance toward healthcare information technology: a theoretical model and empirical test. *European Journal of Information Systems*, 16(6), 725-737.

Bloom, N. (2014). Has Economic Policy Uncertainty Slowed Down the World Economy?. Background paper for the World Development Report.

Bougie, R., Pieters, R., and Zeelenberg, M. (2003). Angry customers don't come back, they get back: the experience and behavioral implications of anger and dissatisfaction in services. *Journal of the Academy of Marketing Science*, 31(4), 377-393.

Bouton, M. E., Mineka, S., and Barlow, D. H. (2001). A modern learning theory perspective on the etiology of panic disorder. *Psychological Review*, 108(1), 4.

Bower, G. H. (1981). Mood and memory. *American psychologist*, 36(2), 129.

Brackett, M. A., and Mayer, J. D. (2003). Convergent, discriminant, and incremental validity of competing measures of emotional intelligence. *Personality and Social Psychology Bulletin*, 29(9), 1147-1158.

Brette, O. (2003). Thorstein Veblen's theory of institutional change: beyond technological determinism. *European Journal of the History of Economic Thought*, 10(3), 455-477.

Brown, S. A., Fuller, R. M., and Vician, C. 2004. Who’s Afraid of the Virtual World? Anxiety and computer-mediated communication, *Journal of the Association for Information Systems* (5:2), pp. 79-107.

Brown, T. A., Chorpita, B. F., & Barlow, D. H. (1998). Structural relationships among dimensions of the DSM-IV anxiety and mood disorders and dimensions of negative affect, positive affect, and autonomic arousal. *Journal of abnormal psychology*, 107(2), 179.

Budd, R. J. (1987), "Response bias and the theory of reasoned action", Social Cognition 5: 95–107

Cabanac, M., (2002), What is emotion?, *Behavioral Processes*, 60, 69-83

Carlson, J. G., (1982), Some concepts of perceived control and their relationship to bodily self-control, Biofeedback and self-regulation, 7, pp. 341 – 375.

Carroll, J. M., & Thomas, J. C. (1988). Fun. ACM SIGCHI Bulletin, 19(3), 21-24.

Cenfetelli, R. T. (2004) Getting in touch with our feelings towards technology, Best Paper Proceedings of the Academy of Management Conference, New Orleans, August 6-11, pp. F1-F6.

Chan, A. Y., Caputi, P., Jayasuriya, R., and Browne, J. L. (2013). Counterfactual thinking and anticipated emotions enhance performance in computer skills training. *Behaviour and Information Technology*, 32(4), 387-396.

Chapman, C. R., and Nakamura, Y. (1998). Hypnotic analgesia: A constructivist framework. *International Journal of Clinical and Experimental Hypnosis*, 46(1), 6-27.

Chau, P. Y., and Hu, P. J. H. (2001). Information technology acceptance by individual professionals: A model comparison approach. *Decision sciences*, 32(4), 699-719.

Chin, W. W. (1998). The partial least squares approach to structural equation modeling. *Modern Methods for Business Research*, 295(2), 295-336.

Chin, w. w. and Gopal, a. (1995). Adoption intention in GSS: Relative importance of beliefs, The Data Base for Advances in Information Systems (26:2/3), pp. 42-64.

Chorpita, B. F., Albano, A. M., and Barlow, D. H. (1998). The structure of negative emotions in a clinical sample of children and adolescents. *Journal of Abnormal Psychology*, 107(1), 74.

Chua, P., Krams, M., Toni, I., Passingham, R., and Dolan, R. (1999). A functional anatomy of anticipatory anxiety. Neuroimage, 9(6), 563-571.

Chuttur, M. Y. (2009). Overview of the technology acceptance model: Origins, developments and future directions. Working Papers on Information Systems,9(37), 9-37.

Cochrane, T. (2009). Eight dimensions for the emotions. *Social Science Information*, 48(3), 379-420.

Cohen, J. (1992). A power primer. *Psychological bulletin*, 112(1), 155.

Compeau, D. R., and Higgins, C. A. (1995). Computer self-efficacy: Development of a measure and initial test. *MIS quarterly*, 189-211.

Compeau, D., Higgins, C. A., and Huff, S. (1999). Social cognitive theory and individual reactions to computing technology: A longitudinal study. *MIS quarterly*, 145-158.

Cyr, D. (2008). Modeling web site design across cultures: relationships to trust, satisfaction, and e-loyalty. *Journal of Management Information Systems*, 24(4), 47-72.

Cyr, D., and Head, M. (2013). Website design in an international context: The role of gender in masculine versus feminine oriented countries. *Computers in Human Behavior*, 29(4), 1358-1367.

Da, Z., Engelberg, J., and Gao, P. (2015). The sum of all fears investor sentiment and asset prices. *Review of Financial Studies*, 28(1), 1-32.

Davenport, T. H. (1998). Putting the enterprise into the enterprise system. *Harvard Business Review*, 76(4).

Davidson, R. J., (2000), Cognitive neuroscience needs affective neuroscience (and vice versa), *Brain and Cognition*, 42, 82-92.

Davis, F. D. (1989), Perceived usefulness, perceived ease of use, and user acceptance of information technology, *MIS Quarterly*, 13(3): 319–340

Davis, F. D. and Venkatesh, V. (1996). A critical assessment of potential measurement biases in the technology acceptance model: three experiments. *International Journal of Human-Computer Studies*, 45(1), 19-45.

Davis, F. D., Bagozzi, R. P., and Warshaw, P. R. (1989), User acceptance of computer technology: A comparison of two theoretical models, *Management Science*, 35: 982–1003

Davis, F. D., Bagozzi, R. P., and Warshaw, P. R. (1992). Extrinsic and intrinsic motivation to use computers in the workplace1. *Journal of Applied Social Psychology*, 22(14), 1111-1132.

De Guinea, A. O. and Markus, M. L., (2009), Why break a habit of a lifetime? Rethinking the roles of intention, habit, and emotion in continuing information technology use, *MIS Quarterly*, 33(3), 433-444.

DeLong, D. W. and Fahey, L. (2000). Diagnosing cultural barriers to knowledge management. *Academy of Management Executive*, Vol. 14, No. 4, November, pp. 113-127

Denis, S., & Kannan, P. (2013). The impact of uncertainty shocks on the UK economy.

Derbaix, C., and Vanhamme, J. (2003). Inducing word-of-mouth by eliciting surprise–a pilot investigation. *Journal of Economic Psychology*, 24(1), 99-116.

DeSanctis, G. and Poole, M. S. (1994). Capturing the complexity in advanced technology use: Adaptive Structuration Theory. *Organization Science*, 5(2), 121-147.

Dias, B. G., Banerjee, S. B., Goodman, J. V., and Ressler, K. J. (2013). Towards new approaches to disorders of fear and anxiety. *Current Opinion in Neurobiology*, 23(3), 346-352.

Dimoka, A., & Davis, F. D. (2008). Where does TAM reside in the brain? The neural mechanisms underlying technology adoption. ICIS 2008 Proceedings, 169.

Dimoka, A., Pavlou, P. A., and Davis, F. D. (2011). Neurosis: The potential of cognitive neuroscience for information systems research, *Information Systems Research*, V. 22(4), p. 687-702.

Drechsler, I. (2013). Uncertainty, time‐Varying fear, and asset prices. *The Journal of Finance*, 68(5), 1843-1889.

Duffy, E., (1962), Activation and behavior, New York: Wiley.

Dutta, A. (2008). A New Perspective in Understanding: The Role of Information Technology Features in Technology Use Pattern. Vikalpa, 33(1), 55.

Earley, P. C. (1989). Social loafing and collectivism: A comparison of the United States and the People's Republic of China. *Administrative Science Quarterly*, 565-581.

Ekman, P. (1992). Are there basic emotions. *Psychological Review*, 99(3), 550-553.

El Emam, K., & Koru, A. G. (2008). A replicated survey of IT software project failures. *Software, IEEE*, 25(5), 84-90.

Epstein, S. (1973). The self-concept revisited: Or a theory of a theory. *American Psychologist*, 28(5), 404.

Epstein, S., (1976). Anxiety, arousal, and the self-concept, In I. G. Sarason and C. D. Spielberger (eds), *Stress and Anxiety* (Vol. 3). Washington, D.C.: Hemisphere.

Epstein, S., and Roupenian, A. (1970). Heart rate and skin conductance during experimentally induced anxiety: The effect of uncertainty about receiving a noxious stimulus. *Journal of Personality and Social Psychology*, 16(1), 20.

Finney, S., & Corbett, M. (2007). ERP implementation: a compilation and analysis of critical success factors. *Business Process Management Journal*,13(3), 329-347.

Ford, D. P., Connelly, C. E., and Meister, D. B. (2003). Information systems research and Hofstede's culture's consequences: an uneasy and incomplete partnership. *Engineering Management, IEEE Transactions on*, 50(1), 8-25.

Forgas, J. P. (1995). Mood and judgment: the affect infusion model (AIM).*Psychological Bulletin*, 117(1), 39.

Fornell, C., and Larcker, D. F. (1981). Structural equation models with unobservable variables and measurement error: Algebra and statistics. *Journal of Marketing Research*, 382-388.

Frijda, N. H. (1993). The place of appraisal in emotion. *Cognition and Emotion*, 7(3-4), 357-387.

Gao, G., & Gudykunst, W. B. (1990). Uncertainty, anxiety, and adaptation. *International Journal of Intercultural Relations*, 14(3), 301-317.

Gargeya, V. B., & Brady, C. (2005). Success and failure factors of adopting SAP in ERP system implementation. *Business Process Management Journal*,11(5), 501-516.

Geertz, C. (1975). On the Nature of Anthropological Understanding: Not extraordinary empathy but readily observable symbolic forms enable the anthropologist to grasp the unarticulated concepts that inform the lives and cultures of other peoples. *American Scientist*, 63(1), 47-53.

Gefen, D., Karahanna, E., & Straub, D. W. (2003). Trust and TAM in online shopping: an integrated model. *MIS quarterly*, 27(1), 51-90.

Giddens, A. (1979). Central problems in social theory: Action, structure, and contradiction in social analysis, California, Berkley: University of California Press.

Giddens, A., (1984), The constitution of society: Outline of the theory of structure, California, Berkeley: University of California Press.

Goodhue, D. L., (1995). Understanding user evaluations of information systems. *Management Science*, 41(12), 1827-1844.

Goodhue, D. L. and Thompson, R. L., (1995). Task-technology fit and individual performance. *MIS Quarterly*, 19(2), 213-236.

Gray, J. A., and McNaughton, N. (1996). The neuropsychology of anxiety: Reprise. In Nebraska symposium on motivation (Vol. 43, pp. 61-134). University of Nebraska Press.

Greco, V., and Roger, D. (2001). Coping with uncertainty: The construction and validation of a new measure. *Personality and Individual Differences*, 31(4), 519-534.

Greenspan, Alan (2013). The map and the territory: Risk, human nature, and the future of forecasting, the Penguin Press HC.

Griffith, T L and Northcraft, G. B., (1994). Distinguishing between the forest and trees: Media, features, and methodology in electronic communication research, *Organization Science*, 5(2), 272-285.

Griffith, T. L., (1999), Technology features as triggers for sense-making, *Academy of Management Review*, 24(3), 472-498.

Gross, J. J. (2002). Emotion regulation: Affective, cognitive, and social consequences. *Psychophysiology*, 39(3), 281-291.

Gudykunst, W. B. (1998). Applying anxiety\ uncertainty management (AUM) Theory to intercultural adjustment training. *International Journal of Intercultural Relations*, 22(2), 227-250.

Hassenzahl, M. (2001). The effect of perceived hedonistic quality on product appealingness. *International Journal of Human-Computer Interaction*, 13(4), 481-499.

Heilbroner, R. L. (1967). Do machines make history?. *Technology and Culture*, 8(3), 335-345.

Hekler, E. B., Klasnja, P., Froehlich, J. E., and Buman, M. P. (2013, April). Mind the theoretical gap: Interpreting, using, and developing behavioral theory in HCI research. In Proceedings of the SIGCHI Conference on Human Factors in Computing Systems (pp. 3307-3316). ACM.

Hendrickson, A. R., Massey, P. D., and Cronan, T. P. (1993). On the test-retest reliability of perceived usefulness and perceived ease of use scales. *MIS Quarterly*, 17(2), 227-230.

Hilgard, E. R. (1949). Human motives and the concept of the self. *American Psychologist*, 4(9), 374.

Hofstede, G. (1998). Attitudes, values and organizational culture: Disentangling the concepts. *Organization Studies*, 19(3), 477-493.

Hofstede, G. H. (2001). Culture's consequences: Comparing values, behaviors, institutions and organizations across nations. Sage.

Hofstede, G., Hofstede, G. J., and Minkov, M. (1991). Cultures and organizations: Software of the mind (Vol. 2). London: McGraw-Hill.

Hong, W., Thong, J. Y., Wong, W. M., and Tam, K. Y. (2002). Determinants of user acceptance of digital libraries: An empirical examination of individual differences and system characteristics. *Journal of Management Information Systems*, 18(3), 97-124.

Horobin, K., & Acredolo, C. (1989). The impact of probability judgments on reasoning about multiple possibilities. *Child Development*, 183-200.

Hsu, C. L., and Lu, H. P. (2004). Why do people play on-line games? An extended TAM with social influences and flow experience. *Information and Management*, 41(7), 853-868.

Hui, C. H. (1988). Measurement of individualism-collectivism. *Journal of Research in Personality*, 22(1), 17-36.

Hwang, Y. (2012). Understanding moderating effects of collectivist cultural orientation on the knowledge sharing attitude by email. *Computers in Human Behavior*. 28(6), 2169-2174.

Hwang, Y., and Kim, D. J. (2007). Understanding affective commitment, collectivist culture, and social influence in relation to knowledge sharing in technology mediated learning. *Professional Communication, IEEE Transactions on*, 50(3), 232-248.

James, W., (1890). The Principles of Psychology. Dover Publications Inc.

Jiang, J. Y., Zhang, X., and Tjosvold, D. (2013). Emotion regulation as a boundary condition of the relationship between team conflict and performance: A multi‐level examination. *Journal of Organizational Behavior*, 34(5), 714-734.

Jurado, K., Ludvigson, S. C., and Ng, S. (2013). Measuring uncertainty (No. w19456). *National Bureau of Economic Research*.

Kagan, J. (1972). Motives and development. *Journal of Personality and Social Psychology*, 22(1), 51.

Karahanna, E., Straub, D. W., and Chervany, N. L. (1999). Information Technology Adoption Across Time: A Cross-Sectional Comparison of Pre-Adoption and Post-Adoption Beliefs, *MIS Quarterly*, (23:2), pp. 183-213.

Keil, M. Beranek, P. M., and Konsynski, B. R. (1995), Usefulness and ease of use: field study evidence regarding task considerations, *Decision Support Systems*, 13(1): 75–91

Kelman, H. C. (1958). Compliance, identification, and internalization: Three processes of attitude change. *Journal of Conflict Resolution*, 51-60.

Kenny, A., and Action, E. (1963). Will. London: Routledge & Kegan Paul, 20, 326-46.

Kim, H. W., Chan, H. C., and Chan, Y. P. (2007). A balanced thinking–feelings model of information systems continuance. *International Journal of Human-Computer Studies*, 65(6), 511-525.

Kim, H. W., Chan, H. C., Chan, Y. P., and Gupta, S. (2004).Understanding the balanced effects of belief and feeling on information systems continuance, in Proceedings of the 25th International Conference on Information Systems, R. Agarwal, L. Kirsch, and J. I. DeGross (eds.), Washington, DC, December 12-15, pp. 297-310.

Kim, S. S., and Malhotra, N. K. (2005), A longitudinal model of continued IS use: An integrative view of four mechanisms underlying postadoption phenomena, *Management Science*, (51:5), pp. 741-755.

Kim, Y., Lee, Z., and Gosain, S. (2005). Impediments to successful ERP implementation process. *Business Process Management Journal*, 11(2), 158-170.

King, W. R., and He, J. (2006). A meta-analysis of the technology acceptance model. *Information and Management*, 43(6), 740-755.

Kitayama, S., Markus, H. R., Matsumoto, H., and Norasakkunkit, V. (1997). Individual and collective processes in the construction of the self: self-enhancement in the United States and self-criticism in Japan. *Journal of Personality and Social Psychology*, 72(6), 1245.

Koch, C., (2004), When bad thing happen to good projects, *CIO Magazine*, Dec1. 18, 50-59.

Kock, N. (2009). Information systems theorizing based on evolutionary psychology: An interdisciplinary review and theory integration framework. *MIS Quarterly*, 33(2), 395-418.

Kose, A. and Terrones, M. (2012). How does uncertainty affect economic performance?. *World Economic Outlook*, October, pages 49–53.

Kose, M. A., and Terrones, M. E. (2012). Uncertainty weighing on the global recovery. VoxEU. org, 18.

Koufaris, M. (2002). Applying the Technology Acceptance Model and Flow Theory to online consumer behavior, *Information Systems Research*, (13:2), 205-223.

Kroeber, A. L., and Kluckhohn, C. (1952). Culture: A critical review of concepts and definitions. Papers. Peabody Museum of Archaeology & Ethnology, Harvard University.

Lang, P. J. (1985). The cognitive psychophysiology of emotion: Fear and anxiety.

Langer, E. J. (1975). The illusion of control. *Journal of Personality and Social Psychology*, 32(2), 311.

Laros, F. J., and Steenkamp, J. B. E. (2005). Emotions in consumer behavior: A hierarchical approach. *Journal of Business Research*, 58(10), 1437-1445.

Lazarus, R. S. (1991). Cognition and motivation in emotion. *American Psychologist*, 46(4), 352.

Lazarus, R. S. (1991). Emotion and Adaption, Oxford University Press, New York.

Lazarus, R. S. (1991). Progress on a cognitive-motivational-relational theory of emotion. *American Psychologist*, 46(8), 819.

Lazarus, R. S., and Folkman, S. (1984). Stress, appraisal, and coping. Springer publishing company.

Lazarus, R. S. and Lazarus, B. N. (1994). Passion and reason: Making sense of our emotions, Oxford University Press: New York Oxford.

Lederer, A. L., Maupin, D. J., Sena, M. P., and Zhuang, Y. (2000). The technology acceptance model and the World Wide Web. *Decision Support Systems*, 29(3), 269-282.

LeDoux, J. E. (1989). Cognitive-emotional interactions in the brain. *Cognition and Emotion*, 3(4), 267-289.

Lefcourt, H. M. (1973). The function of the illusions of control and freedom. *American Psychologist*, 28(5), 417.

Legris, P., Ingham, J., and Collerette, P. (2003). Why do people use information technology? A critical review of the technology acceptance model, *Information and Management*, 40(3), 191-204.

Lehrman, D. S., (1964). The reproductive behavior of ring doves, *Scientific American*, 211,

Leidner, D. E., and Kayworth, T. (2006). Review: a review of culture in information systems research: toward a theory of information technology culture conflict, *MIS Quarterly*, 30(2), 357-399.

Lim, K. H., Leung, K., Sia, C. L., and Lee, M. K. (2004). Is eCommerce boundary-less? Effects of individualism–collectivism and uncertainty avoidance on Internet shopping, *Journal of International Business Studies*,35(6), 545-559.

Lindsley, D. B., (1951). Emotion, In S. S. Stevens (Ed.), Handbook of experimental psychology, New York: Wiley.

Litvin, S. W., Crotts, J. C., and Hefner, F. L. (2004). Cross‐cultural tourist behaviour: a replication and extension involving Hofstede's uncertainty avoidance dimension, *International Journal of Tourism Research*, 6(1), 29-37.

Ma, Q., and Liu, L. (2005). The Technology Acceptance Model: A Meta-Analysis of. Advanced Topics in End User Computing, 4, 112.

Mandler, G., (1975). Mind and emotion, New York: Wiley.

Marangunić, N., and Granić, A. (2015). Technology acceptance model: a literature review from 1986 to 2013. *Universal Access in the Information Society*, 14(1), 81-95.

Markus, H. R., and Kitayama, S. (1991). Culture and the self: Implications for cognition, emotion, and motivation, *Psychological Review*, 98(2), 224.

McCoy, S., Galletta, D. F., and King, W. R. (2007). Applying TAM across cultures: the need for caution, *European Journal of Information Systems*, 16(1), 81-90.

McReynolds, P. (2015). Assimilation and anxiety. Emotions and Anxiety (PLE: Emotion): New Concepts, Methods, and Applications, 12, 35.

Mick, D. G., and Fournier, S. (1998). Paradoxes of technology: consumer cognizance, emotions, and coping strategies, *Journal of Consumer Research*, 25(2), 123-143.

Miller, T., Pedell, S., Lopez-Lorca, A. A., Mendoza, A., Sterling, L., and Keirnan, A. (2015). Emotion-led modelling for people-oriented requirements engineering: the case study of emergency systems. *Journal of Systems and Software*, 105, 54-71.

Monat, A., Averill, J. R., and Lazarus, R. S. (1972). Anticipatory stress and coping reactions under various conditions of uncertainty. *Journal of Personality and Social Psychology*, 24(2), 237.

Money, R. B., and Crotts, J. C. (2003). The effect of uncertainty avoidance on information search, planning, and purchases of international travel vacations. *Tourism Management*, 24(2), 191-202.

Moore, G. C., and Benbasat, I. (1991). Development of an instrument to measure the perceptions of adopting an information technology innovation. *Information Systems Research*, 2(3), 192-222.

Morris, M. G., and Venkatesh, V. (2000). Age differences in technology adoption decisions: Implications for a changing work force. *Personnel Psychology*, 53(2), 375-403.

Murphy, L. B., and Moriarty, A. E., (1976), Vulnerability, coping, and growth: From infancy to adolescence. New Haven: Yale University Press.

Mushtaq, F., Bland, A. R., and Schaefer, A. (2011). Uncertainty and cognitive control. *Frontiers in Psychology*, 2, 249-249.

Myers, M. D., and Tan, F. B. (2003). Beyond models of national culture in information systems research. *Advanced Topics in Global Information Management*, 2.

Nah, F. F. H., and Delgado, S. (2006). Critical success factors for enterprise resource planning implementation and upgrade. *Journal of Computer Information Systems*, 46(5), 99-113.

Nah, F. F. H., Zuckweiler, K. M., and Lee-Shang Lau, J. (2003). ERP implementation: Chief information officers' perceptions of critical success factors. *International Journal of Human-Computer Interaction*, 16(1), 5-22.

Nelson, D. L. and J. C. Quick. (2003). Organizational behavior: Foundations, realities, and challenges. Fourth Edition, Mason, Ohio: Thomson Southwestern,.

Nelson, S. C., and Katzenstein, P. J. (2014). Uncertainty, risk, and the financial crisis of 2008. *International Organization*, 68(02), 361-392.

Orlikowski, W. and Iacono, C. S., (2001). Desperately Seeking the "IT" in IT research: A Call to Theorizing the IT artifact. *Information Systems Research*, 12(2), 121-134.

Osojnik, M. (2011). Cultural diplomacy and the European Union: Key characters and historical development. *Institute for Cultural Diplomacy*.

Oyserman, D., and Lee, S. W. (2008). Does culture influence what and how we think? Effects of priming individualism and collectivism. *Psychological Bulletin*, 134(2), 311.

Parsons, T., and Shills, E. (1951). Toward a Theory of Social Action: Theoretical Foundation for the Social Sciences. New York, Haroer Torchbook.

Phan, K. L., and Sripada, C. S. (2013). Emotion Regulation. The Cambridge Handbook of Human Affective Neuroscience, 375.

Picard., R., W., (1999), Proceedings of HCI International (the 8th International Conference on Human-Computer Interaction) on Human-Computer Interaction: Ergonomics and User Interfaces-Volume I, Pages 829-833

Podsakoff, P. M., MacKenzie, S. B., Lee, J. Y., and Podsakoff, N. P. (2003). Common method biases in behavioral research: A critical review of the literature and recommended remedies. *Journal of Applied Psychology*, 88(5), 879.

Pratt, S., Blake, A., and Swann, P. (2013). Dynamic general equilibrium model with uncertainty: Uncertainty regarding the future path of the economy. *Economic Modelling*, 32, 429-439.

Reed, A. H., and Knight, L. V. (2013). Exploring the role of communication media in the informing science model: An information technology project management perspective. *Informing Science: the International Journal of an Emerging Transdiscipline*, 16.

Reimann, M., Lünemann, U. F., and Chase, R. B. (2008). Uncertainty avoidance as a moderator of the relationship between perceived service quality and customer satisfaction. *Journal of Service Research*, 11(1), 63-73.

Reisenzein, R. (1994). Pleasure-arousal theory and the intensity of emotions. *Journal of Personality and Social Psychology*, 67(3), 525.

Riedl, R., Banker, R. D., Benbasat, I., Davis, F. D., Dennis, A. R., Dimoka, A., Gefen, D., Gupta, A., Ischebeck, A., Kenning, P., Muller-Putz, G., Paulou, P. A., Straub, D. W., vom Brocke, J., and Weber, B., (2010). On the foundations of neurosIS: Reflections on the Gumunden retreat 2009, *Communications of the Association for Information Systems*, V. 27(15), pp. 243-264.

Rodger, J. A., and Gonzalez, S. P. (2014). A study on emotion and memory in technology adoption. *Journal of Computer Information Systems*, 54(4), 31-41.

Roseman, I. J. (1991). Appraisal determinants of discrete emotions. *Cognition and Emotion*, 5(3), 161-200.

Rotter, J. B. (1975). Some problems and misconceptions related to the construct of internal versus external control of reinforcement. *Journal of Consulting and Clinical Psychology*, 43(1), 56.

Russell, J. A. (2003). Core affect and the psychological construction of emotion. *Psychological Review*, 110(1), 145.

Sampson, E. E. (1988). The debate on individualism: Indigenous psychologies of the individual and their role in personal and societal functioning. *American Psychologist*, 43(1), 15.

Sanchez-Franco, M. J. (2006). Exploring the influence of gender on the web usage via partial least squares. *Behaviour & Information Technology*, 25(1), 19-36.

Schacther, S., (1966), The integration of cognitive and physiological determinants of emotional state, In C. D. Spielberger (Ed.), Anxiety and behavior, New York: Academic Press.

Schepers, J., and Wetzels, M. (2007). A meta-analysis of the technology acceptance model: Investigating subjective norm and moderation effects. *Information and Management*, 44(1), 90-103.

Segars, A. H.; Grover, V. (1993), Re-examining perceived ease of use and usefulness: A confirmatory factor analysis, *MIS Quarterly*, 17: 517–525.

Shane, S. H. (1995). Behavior patterns of pilot whales and Risso's dolphins off Santa Catalina Island, California. Aquatic Mammals, 21, 195-198.

Shank, D. B. (2013). Are computers good or bad for business? How mediated customer–computer interaction alters emotions, impressions, and patronage toward organizations. *Computers in Human Behavior*, 29(3), 715-725.

Shweder, R. A., & LeVine, R. A. (1984). Culture theory: Essays on mind, self and emotion. Cambridge University Press.

Simpson Jr, J. R., Drevets, W. C., Snyder, A. Z., Gusnard, D. A., and Raichle, M. E. (2001). Emotion-induced changes in human medial prefrontal cortex: II. During anticipatory anxiety. Proceedings of the National Academy of Sciences, 98(2), 688-693.

Sloan, C., Conner, M., & Gough, B. (2015). How does masculinity impact on health? A quantitative study of masculinity and health behavior in a sample of UK men and women. *Psychology of Men & Masculinity*, 16(2), 206.

Smith, C. A., Haynes, K. N., Lazarus, R. S., and Pope, L. K. (1993). In search of the" hot" cognitions: Attributions, appraisals, and their relation to emotion. *Journal of Personality and Social Psychology*, 65(5), 916.

Smith, R. E., Smoll, F. L., Cumming, S. P., and Grossbard, J. R. (2006). Measurement of multidimensional sport performance anxiety in children and adults: The Sport Anxiety Scale-2. *Journal of Sport and Exercise Psychology*,28(4), 479.

Soja, P. (2006). Success factors in ERP systems implementations: lessons from practice. *Journal of Enterprise Information Management*, 19(4), 418-433.

Soloman, R. S., (1977). The logic of emotion, Nous, 41-49.

Spink, A., and Cole, C. (2004). A human information behavior approach to a philosophy of information. *Library Trends*, 52(3), 617-628.

Spink, A., and Cole, C. (2006). Human information behavior: Integrating diverse approaches and information use. *Journal of the American Society for information Science and Technology*, 57(1), 25-35.

Srite, M., and Karahanna, E. (2006). The role of espoused national cultural values in technology acceptance. *MIS Quarterly*, 30(3), 679-704.

Staw, B. M. (1986). Organizational psychology and the pursuit of the happy/productive worker. *California Management Review*, 28(4), 40-53.

Steenkamp, J. B. E., Hofstede, F. T., and Wedel, M. (1999). A cross-national investigation into the individual and national cultural antecedents of consumer innovativeness. *The Journal of Marketing*, 55-69.

Stewart, T. (1986), Task fit, ease-of-use and computer facilities, Norwood, NJ: Ablex, pp. 63–76 In N. Bjørn-Andersen, K. Eason, and D. Robey (Eds.), Managing computer impact: An international study of management and organizations, 63-76.

Stieglitz, S., and Dang-Xuan, L. (2013). Emotions and Information Diffusion in Social Media—Sentiment of Microblogs and Sharing Behavior. *Journal of Management Information Systems*, 29(4), 217-248.

Straub, D., Limayem, M., and Karahanna-Evaristo, E. (1995). Measuring system usage: Implications for IS theory testing. *Management Science*, 41(8), 1328-1342.

Straube, T., Mentzel, H. J., and Miltner, W. H. (2007). Waiting for spiders: brain activation during anticipatory anxiety in spider phobics. Neuroimage, 37(4), 1427-1436.

Subramanian, G. H. (1994). A replication of perceived usefulness and perceived ease of use measurement. *Decision Sciences*, 25(5/6), 863–873.

Sun, H., and Zhang, P. (2006). The role of moderating factors in user technology acceptance. *International Journal of Human-Computer Studies*, 64(2), 53-78.

Szajna, B. (1994). Software evaluation and choice: predictive evaluation of the Technology Acceptance Instrument, *MIS Quarterly*, 18(3), 319–324.

Takizawa, R., Nishimura, Y., Yamasue, H., and Kasai, K. (2014). Anxiety and performance: The disparate roles of prefrontal subregions under maintained psychological stress. *Cerebral Cortex*, 24(7), 1858-1866.

Tall, D. (2013). The Evolution of Technology and the Mathematics of Change and Variation: Using Human Perceptions and Emotions to Make Sense of Powerful Ideas. In The SimCalc Vision and Contributions (pp. 449-461). Springer Netherlands.

Taylor, S. (1994). Waiting for service: the relationship between delays and evaluations of service. *The Journal of Marketing*, 56-69.

Tellegen, A., Watson, D., and Clark, L. A. (1999). On the dimensional and hierarchical structure of affect. *Psychological Science*, 10(4), 297-303.

Teo, A. C., Tan, G. W. H., Cheah, C. M., Ooi, K. B., and Yew, K. T. (2012). Can the demographic and subjective norms influence the adoption of mobile banking?. *International Journal of Mobile Communications*, 10(6), 578-597.

Terzis, V., Moridis, C. N., and Economides, A. A. (2013). Measuring instant emotions based on facial expressions during computer-based assessment. *Personal and Ubiquitous Computing*, 17(1), 43-52.

Thompson, R. L., Higgins, C. A., & Howell, J. M. (1991). Personal computing: Toward a conceptual model of utilization. *MIS quarterly*, 125-143.

Tiedens, L. Z., & Linton, S. (2001). Judgment under emotional certainty and uncertainty: the effects of specific emotions on information processing. *Journal of Personality and Social Psychology*, 81(6), 973.

Todman, J., and Monaghan, E. (1995). Qualitative differences in computer experience, computer anxiety, and students' use of computers: A path model. *Computers in Human Behavior*, 10(4), 529-539.

Tornatzky, L. G. and Klein, R. J. (1982). Innovation characteristics and innovation adoption-implementation: A meta-analysis of findings. *IEEE Transactions on Engineering Management* EM-29: 28–45

Trope, Y., and Liberman, A. (1996). Social hypothesis testing: Cognitive and motivational mechanisms.

Tsao, J. C., Myers, C. D., Craske, M. G., Bursch, B., Kim, S. C., and Zeltzer, L. K. (2004). Role of anticipatory anxiety and anxiety sensitivity in children's and adolescents' laboratory pain responses. *Journal of Pediatric Psychology*, 29(5), 379-388.

Van der Heijden, H. (2004). User acceptance of hedonic information systems. *MIS Quarterly*, 695-704.

Veblen, T. (1965). The Theory of the Leisure Class: 1899. AM Kelley, bookseller.

Veiga, J. F., Floyd, S., and Dechant, K. (2001). Towards modelling the effects of national culture on IT implementation and acceptance. *Journal of Information Technology*, 16(3), 145-158.

Venkatesh, V. (1999). Creation of favorable user perceptions: Exploring the role of intrinsic motivation. *MIS Quarterly*, 239-260.

Venkatesh, V. (2000). Determinants of perceived ease of use: Integrating control, intrinsic motivation, and emotion into the technology acceptance model. *Information Systems Research*, 11(4), 342-365.

Venkatesh, V., and Bala, H. (2008). Technology acceptance model 3 and a research agenda on interventions. *Decision Sciences*, 39(2), 273-315.

Venkatesh, V., and Bala, H. (2012). Adoption and impacts of interorganizational business process standards: Role of partnering synergy. *Information Systems Research*, 23(4), 1131-1157.

Venkatesh, V., and Brown, S. A. (2001). A longitudinal investigation of personal computers in homes: Adoption determinants and emerging challenges. *MIS Quarterly*, 71-102.

Venkatesh, V., and Davis, F. D. (1996). A model of the antecedents of perceived ease of use: Development and test. *Decision Sciences*, 27(3), 451-481.

Venkatesh, V., and Davis, F. D. (2000). A theoretical extension of the technology acceptance model: Four longitudinal field studies. *Management Science*, 46(2), 186-204.

Venkatesh, V., and Morris, M. G. (2000). Why don't men ever stop to ask for directions? Gender, social influence, and their role in technology acceptance and usage behavior. *MIS Quarterly*, 24(1), 115-140.

Venkatesh, V., Morris, M. G., and Ackerman, P. L. (2000). A longitudinal field investigation of gender differences in individual technology adoption decision-making processes. *Organizational Behavior and Human Decision Processes*, 83(1), 33-60.

Venkatesh, V., Morris, M. G., Davis, G. B., and Davis, F. D. (2003). User acceptance of information technology: Toward a unified view. *MIS Quarterly*, 425-478.

Vidyarthi, P. R., Anand, S., and Liden, R. C. (2014). Do emotionally perceptive leaders motivate higher employee performance? The moderating role of task interdependence and power distance. *The Leadership Quarterly*, 25(2), 232-244.

Wagner, J. A., and Moch, M. K. (1986). Individualism-collectivism: Concept and measure. *Group & Organization Management*, 11(3), 280-304.

Wakefield, R. (2013). The influence of user affect in online information disclosure. *The Journal of Strategic Information Systems*, 22(2), 157-174.

Wang, M., and Saudino, K. (2013). An old but perpetual topic: Cognition and Emotion: Reviews of Current Research and Theories De Houwer Jan Hermans Dirk Psychology Press New York, NY. *The American Journal of Psychology*, 126(1), 128-132.

Wang, X., and Butler, B. (2003). Individual technology acceptance under conditions of change. ICIS 2003 Proceedings, 60.

Watson, D., and Tellegen, A. (1985). Toward a consensual structure of mood. *Psychological Bulletin*, 98(2), 219.

Watson, D., Clark, L. A., and Tellegen, A. (1988). Development and validation of brief measures of positive and negative affect: the PANAS scales. *Journal of Personality and Social Psychology*, 54(6), 1063.

Webster, J. and Martocchio, J. J. (1992). Microcomputer playfulness: Development of a measure with workplace implications, *MIS Quarterly*, 16(2), pp. 201-226.

Whinston, A. B. and Geng, X., (2004). Operationalizing the essential role of the information technology artifact in information systems research: Gray area, pitfalls, and the importance of strategic ambiguity. *MIS Quarterly*, 28(2) 149-159.

Wildemuth, B. M. (1992). An empirically grounded model of the adoption of intellectual technologies. *Journal of the American Society for Information Science*, 43(3), 210–224.

Wu, J. H., and Wang, S. C. (2005). What drives mobile commerce?: An empirical evaluation of the revised technology acceptance model. *Information and Management*, 42(5), 719-729.

Wu, J., and Lederer, A. (2009). A meta-analysis of the role of environment-based voluntariness in information technology acceptance. *MIS Quarterly*, 33(2), 419-432.

Ybarra, O., and Trafimow, D. (1998). How priming the private self or collective self affects the relative weights of attitudes and subjective norms.

Yi, M. Y., and Hwang, Y. (2003). Predicting the use of web-based information systems: self-efficacy, enjoyment, learning goal orientation, and the technology acceptance model. *International Journal of Human-Computer Studies*, 59(4), 431-449.

Zajonc, R. B. (1980). Feeling and thinking: Preferences need no inferences. *American Psychologist*, 35(2), 151.

Zajonc, R. B. and Markus, H. (1982). Affective and cognitive factors in preferences. *Journal of Consumer Research*, 123-131.

Zajonc, R.B. (1984). On the primacy of affect. *American Psychologist*, 39, 117-123.

Zemack, E. M. (2001). What is emotion? *American Philosophical Quarterly*, 38(2), 197-207.

Zhang, P. (2013). The affective response model: A theoretical framework of affective concepts and their relationships in the ICT context. *MIS Quarterly*, 37(1), 247-274.

Ziv, M., Goldin, P. R., Jazaieri, H., Hahn, K. S., and Gross, J. J. (2013). Is there less to social anxiety than meets the eye? Behavioral and neural responses to three socio-emotional tasks. *Biology of Mood and Anxiety Disorders*, 3(1), 5.

VI. APPENDICES

Appendix 1 - Measures

Essay 1 & 2 Survey Items

Answering the following questions about your experience with SAP, in the context of the work environment (or potential work environment if your only exposure to SAP was in this course).

Affective commitment	
CO1	I feel a sense of belonging while using SAP.
CO2	I feel loyal using SAP over other ERP providers.
CO3	I would like to develop a long-term working relationship with SAP.
CO4	I feel strongly attached to use SAP.
CO5	I feel more attached to SAP than other ERP providers.
Temporal commitment	
CO6	I expect to continue to use SAP for a long time to come.
CO7	I expect to use SAP again in the future.
CO8	I want to continue to use SAP.
Instrumental commitment	
CO9	It would be difficult for me to find another ERP provider of equal standard as SAP.
CO10	I do not have a good alternative to SAP.
CO11	The costs for me to find another ERP provider are very high.
CO12	It would cost me a great deal to switch to another ERP provider.
CO13	I am concerned about what would happen if I switch to another ERP provider.
CO14	Moving to another ERP provider is not worth the effort.
CO15	In general it would be inconvenient to change SAP.

Perception of External Control (Facilitation conditions)	
PC1	When using SAP, I feel in control.
PC2	I have the resources necessary to use SAP
PC3	I have the knowledge necessary to use SAP
PC4	Given the resources, opportunities, and knowledge it takes to use SAP, it would be easy for me to use SAP.
PC5	SAP is not compatible with other IT systems that I use.

Subjective Norms (Normative Beliefs)	
NB1	My relatives think that I should use SAP for work or school.
NB2	My friends believe I should use SAP for work or school.
NB3	My professors think I should use SAP for work or school.
NB4	I believe that my classmates/coworkers will think I should use SAP for work or school.

Perceived Usefulness	
PU1	Using SAP would make it easier to do my job or school work.
PU2	Using SAP would improve my performance.
PU3	Using SAP in my job would increase my productivity.
PU4	Using SAP in my job would enable me to accomplish tasks more quickly.
PU5	I believe I would find SAP useful in my job or school work.
PU6	Using SAP would enhance my effectiveness.

Perceived Ease of Use	
PEOU1	I believe I would find SAP easy to use.
PEOU2	Interacting with SAP would be clear and understandable.

PEOU3	It would be easy for me to become skillful at using SAP.
PEOU4	Learning to operate SAP would be easy for me.
PEOU5	I believe I would find SAP to be flexible to interact with.
PEOU6	I believe I would find it easy to get SAP to do what I want it to do.

Enjoyment	
EN1	I find SAP Interesting.
EN2	I find SAP enjoyable.
EN3	I find SAP exciting.
EN4	I find SAP fun.

Anxiety and Fear	
AF1	SAP makes me feel uncomfortable
AF2	I get a sinking feeling when I think of trying to use SAP.
AF3	SAP scares me
AF4	I feel comfortable using SAP.
AF5	Working with SAP makes me nervous
AF6	Using SAP makes me nervous
AF7	Using SAP makes me uneasy

Behavioral Intention	
BI1	I intended to use SAP.
BI2	I intended to use SAP frequently.

Answering the following questions about your experience with Microsoft Access, in the context of the work environment if you are employed, or school if you are not.

Commitment	
CO1	I feel a sense of belonging toward Microsoft Access.
CO2	I am loyal to Microsoft Access.
CO3	I would like to develop a long-term relationship with Microsoft Access.
CO4	I feel strongly attached to Microsoft Access.
CO5	I feel more attached to Microsoft Access than other programs.
	Temporal commitment
CO6	I expect to continue to use Microsoft Access for a long time to come.
CO7	I expect to use Microsoft Access again in the future.
CO8	I want to continue to use Microsoft Access.
	Instrumental commitment
CO9	It would be difficult for me to find another ERP provider of equal standard as Microsoft Access.
CO10	I do not have a good alternative to Microsoft Access.
CO11	The costs for me to find another ERP provider are very high.
CO12	It would cost me a great deal to switch to another ERP provider.
CO13	I am concerned about what would happen if I switch to another ERP provider.
CO14	Moving to another ERP provider is not worth the effort.
CO15	In general it would be inconvenient to change Microsoft Access.

Perception of External Control (Facilitation conditions)	
PC1	When using Microsoft Access, I feel in control.
PC2	I have the resources necessary to use Microsoft Access.
PC3	I have the knowledge necessary to use Microsoft Access.
PC4	Given the resources, opportunities, and knowledge it takes to use Microsoft Access, it would be easy for me to use Microsoft Access.
PC5	Microsoft Access is not compatible with other IT systems that I use.

Subjective Norms (Normative Beliefs)	
NB1	My relatives think that I should use Microsoft Access for work or school.
NB2	My friends believe I should use Microsoft Access for work or school.
NB3	My professors think I should use Microsoft Access for work or school.
NB4	I believe that my classmates/coworkers will think I should use Microsoft Access for work or school.

Perceived Usefulness	
PU1	Using Microsoft Access would make it easier to do my job or school work.
PU2	Using Microsoft Access would improve my performance.
PU3	Using Microsoft Access in my job would increase my productivity.
PU4	Using Microsoft Access in my job would enable me to accomplish tasks more quickly.
PU5	I believe I would find Microsoft Access useful in my job or school work.
PU6	Using Microsoft Access would enhance my effectiveness.

Perceived Ease of Use	
PEOU1	I believe I would find Microsoft Access easy to use.
PEOU2	Interacting with Microsoft Access would be clear and understandable.
PEOU3	It would be easy for me to become skillful at using Microsoft Access.
PEOU4	Learning to operate Microsoft Access would be easy for me.
PEOU5	I believe I would find Microsoft Access to be flexible to interact with.
PEOU6	I believe I would find it easy to get Microsoft Access to do what I want it to do.

Enjoyment	
EN1	I find Microsoft Access Interesting.
EN2	I find Microsoft Access enjoyable.
EN3	I find Microsoft Access exciting.
EN4	I find Microsoft Access fun.

Anxiety and Fear	
AF1	Microsoft Access makes me feel uncomfortable
AF2	I get a sinking feeling when I think of trying to use Microsoft Access.
AF3	Microsoft Access scares me
AF4	I feel comfortable using Microsoft Access.
AF5	Working with Microsoft Access makes me nervous
AF6	Using Microsoft Access makes me nervous
AF7	Using Microsoft Access makes me uneasy

Behavioral Intention	
BI1	I intended to use Microsoft Access.
BI2	I intended to use Microsoft Access frequently.

Do you own an iPad? Yes_____ No_____

Answering the following questions about your experience with an iPad, in the context of your personal interaction with an iPad (if you own one) or in the context of your personal knowledge of an iPad (if you do not own one).

Commitment	
CO1	I feel a sense of belonging toward an iPad.
CO2	I am loyal to an iPad.
CO3	I am committed to my relationship with an iPad.
CO4	I would like to develop a long-term relationship with an iPad.
CO5	I feel strongly attached to an iPad.
CO6	I feel more attached to an iPad.

Perception of External Control (Facilitation conditions)	
PC1	When using an iPad, I feel in control.
PC2	I have the resources necessary to use an iPad.
PC3	I have the knowledge necessary to use An iPad.
PC4	Given the resources, opportunities, and knowledge it takes to use an iPad, it would be easy for me to use an iPad.
PC5	An iPad is not compatible with other IT systems that I use.

Subjective Norms (Normative Beliefs)	
NB1	My relatives think that I should use an iPad for work or school.
NB2	My friends believe I should use an iPad for work or school.
NB3	My professors think I should use an iPad for work or school.
NB4	I believe that my classmates/coworkers will think I should use an iPod for work or school.

Perceived Usefulness	
PU1	Using an iPad would make it easier to do my job or school work.
PU2	Using an iPad would improve my performance.
PU3	Using an iPad in my job would increase my productivity.
PU4	Using an iPad in my job would enable me to accomplish tasks more quickly.
PU5	I believe I would find an iPad useful in my job or school work.
PU6	Using an iPad would enhance my effectiveness.

Perceived Ease of Use

PEOU1	I believe I would find an iPad easy to use.
PEOU2	Interacting with an iPad would be clear and understandable.
PEOU3	It would be easy for me to become skillful at using an iPad.
PEOU4	Learning to operate an iPad would be easy for me.
PEOU5	I believe I would find an iPad to be flexible to interact with.
PEOU6	I believe I would find it easy to get an iPad to do what I want it to do.

Enjoyment	
EN1	I find an iPad Interesting.
EN2	I find an iPad enjoyable.
EN3	I find an iPad exciting.
EN4	I find an iPad fun.

Anxiety and Fear	
AF1	An iPad makes me feel uncomfortable.
AF2	I get a sinking feeling when I think of trying to use an iPad.
AF3	An iPad scares me.
AF4	I feel comfortable using an iPad.
AF5	Working with an iPad makes me nervous.
AF6	Using an iPad makes me nervous.
AF7	Using an iPad makes me uneasy.

Behavioral Intention	
BI1	I intended to use an iPad.
BI2	I intended to use an iPad frequently.

Do you own a smartphone? Yes_____ No_____

Answering the following questions about your experience with a smartphone, in the context of your personal interaction with a smartphone (if you own one) or in the context of your personal knowledge of a smartphone (if you do not own one).

Commitment	
CO1	I feel a sense of belonging toward a smartphone.
CO2	I am loyal to a smartphone.

CO3	I am committed to my relationship with a smartphone.
CO4	I would like to develop a long-term relationship with a smartphone.
CO5	I feel strongly attached to a smartphone.
CO6	I feel more attached to a smartphone.

Perception of External Control (Facilitation conditions)	
PC1	When using a smartphone, I feel in control.
PC2	I have the resources necessary to use a smartphone.
PC3	I have the knowledge necessary to use a smartphone.
PC4	Given the resources, opportunities, and knowledge it takes to use a smartphone, it would be easy for me to use a smartphone.
PC5	A smartphone is not compatible with other IT systems that I use.

Subjective Norms (Normative Beliefs)	
NB1	My relatives think that I should use a smartphone for work or school.
NB2	My friends believe I should use a smartphone for work or school.
NB3	My professors think I should use a smartphone for work or school.
NB4	I believe that my classmates/coworkers will think I should use a smartphone for work or school.

Perceived Usefulness	
PU1	Using a smartphone would make it easier to do my job or school work.
PU2	Using a smartphone would improve my performance.
PU3	Using a smartphone in my job would increase my productivity.
PU4	Using a smartphone in my job would enable me to accomplish tasks more quickly.
PU5	I believe I would find a smartphone useful in my job or school work.
PU6	Using a smartphone would enhance my effectiveness.

Perceived Ease of Use	
PEOU1	I believe I would find a smartphone easy to use.
PEOU2	Interacting with a smartphone would be clear and understandable.
PEOU3	It would be easy for me to become skillful at using a smartphone.
PEOU4	Learning to operate a smartphone would be easy for me.
PEOU5	I believe I would find a smartphone to be flexible to interact with.
PEOU6	I believe I would find it easy to get a smartphone to do what I want it to do.

Enjoyment	
EN1	I find a smartphone Interesting.

EN2	I find a smartphone P enjoyable.
EN3	I find a smartphone exciting.
EN4	I find a smartphone fun.

Anxiety and Fear	
AF1	A smartphone makes me feel uncomfortable.
AF2	I get a sinking feeling when I think of trying to use a smartphone.
AF3	A smartphone scares me.
AF4	I feel comfortable using a smartphone.
AF5	Working with a smartphone makes me nervous.
AF6	Using a smartphone makes me nervous.
AF7	Using a smartphone makes me uneasy.

Behavioral Intention	
BI1	I intended to use a smartphone.
BI2	I intended to use a smartphone frequently.

	Individualism/Collectivism
IC1	Being accepted as a member of a group is more important than having autonomy and independence
IC2	Being accepted as a member of a group is more important than being independent
IC3	Group success is more important than individual success
IC4	Being loyal to a group is more important than individual gains
IC5	Individual rewards are not as important as group welfare
IC6	It is more important for a manager to encourage loyalty and a sense of duty in subordinates than it is to encourage individual initiative

	Power Distance
PD1	Managers should make most decisions without consulting subordinates
PD2	Managers should not ask subordinates for advice, because they might appear less powerful
PD3	Decision making power should stay with top management in the organization and not be delegated to lower level employees
PD4	Employees should not question their manager's decisions
PD5	A manager should perform work which is difficult and important and delegate tasks which are repetitive and mundane to subordinates
PD6	Higher level managers should receive more benefits and privileges than lower level managers and professional staff
PD7	Managers should be careful not to ask the opinions of subordinates too frequently, otherwise the manager might appear to be weak and incompetent

	Uncertainty Avoidance

UA1	Rules and regulations are important because they inform workers of what the organization expects of them
UA2	Order and structure are very important in a work environment
UA3	It is important to have job requirements and instructions spelled out in detail so that people always know what they are expected to do
UA4	It is better to have a bad situation that you know about, than to have an uncertain situation which might be better
UA5	Providing opportunities to be innovative is more important than requiring standardized work procedures
UA6	People should avoid making changes because things could get worse

	Masculinity/Femininity
MF1	It is preferable to have a man in high level position rather than a woman
MF2	There are some jobs in which a man can always do better than a woman
MF3	It is more important for men to have a professional career than it is for women to have a professional career
MF4	Solving organizational problems requires the active forcible approach which is typical of men.
MF5	Women do not value recognition and promotion in their work as much as men do
MF6	Having challenging work to do is a more important work goal than having a friendly work atmosphere
MF7	Getting the recognition you deserve when you do a good job is a more important work goal than employment security
MF8	Prestige is a more important goal to me than having less stress at work
MF9	Having challenging work to do is a more important work goal than having a good working relationship with your manager

Demographics:

1. Gender:
   - ☐ Male
   - ☐ Female

2. Occupation:

☐ Student, Major:_____

☐ Professional, :_____

☐ Others

3. Age: _____ (in years)

. Nationality: _____

5. The highest level of formal education that I have completed is:
   - ☐ Some College
   - ☐ College Graduate
   - ☐ Some Graduate Work
   - ☐ Graduate Degree

6. What is your work experience:
   - ☐ less than 1 year
   - ☐ 1-5 years

- ☐ 5-10 years
- ☐ more than 10 years

7. What is your Information technology (IT) experience:
   - ☐ less than 1 year
   - ☐ 1-5 years
   - ☐ 5-10 years
   - ☐ more than 10 years

Essay 3 – Survey Items

Emotional Uncertainty	
EU01	I feel anxious when things are changing.
EU02	I get worried when a situation is uncertain.
EU03	Uncertainty frightens me.
EU04	When uncertain about what to do next, I tend to feel lost.
EU05	When I can't clearly discern situation, I get apprehensive.
EU06	Facing uncertainty is a nerve wracking experience.
EU07	When making a decision, I am deterred by the fear of making a mistake.
EU08	Sudden changes make me feel upset.
EU09	Thinking about uncertainty makes me feel depressed.
EU10	I am hesitant when it comes to making changes.
EU11	When I'm not certain about someone's intentions toward me, I often become upset or angry.
EU12	When the future is uncertain, I generally expect the worst to happen.
EU13	When a situation is unclear, it makes me feel angry.
EU14	I tend to give up easily when I don't clearly understand a situation.
Cognitive Uncertainty	
CU01	I like to plan ahead in detail rather than leaving things to chance.
CU02	I try to have my life and career clearly mapped out.
CU03	I like to know exactly what I'm going to do next.
CU04	I feel better about myself when I know that I have done all I can to accurately plan my future.
CU05	When facing an uncertain situation, I tend to prepare as much as possible, and then hope for the best.
CU06	I like things to be ordered and in place, both at work and home.
CU07	I like to have things under control.
CU08	Before making any changes, I need to think things through over thoroughly.
CU09	When I feel uncertain, I try to take decisive steps to clarify the situation.
CU10	I feel relieved when an ambiguous situation suddenly becomes clear.
CU11	When I feel a situation is unclear, I try to do my best to resolve it.
CU12	I like to have my weekends planned in advance.
CU13	When I go shopping, I like to have list exactly of what I need.
CU14	When I feel uncertain about something, I try to rationally weigh up all the information I have.
CU15	Before I buy something, I have to view every sample I can find.
CU16	When uncertain, I act very cautiously until I have more information about the situation.
CU17	I prefer stick to tried and tested ways of doing things.

Anticipatory Anxiety	
AA01	I worry that I won't use the ERP System (SAP) well.
AA02	I worry that I will let my coworkers down.
AA03	I worry that I will not perform my best.
AA04	I worry that I will perform badly.
AA05	I worry that I will mess up during the training to use the ERP System (SAP).
AA06	It is hard to concentrate on using the ERP System (SAP).
AA07	It is hard for me to focus on what I am supposed to do.
AA08	I lose focus on the ERP System (SAP).
AA09	I cannot think clearly while using the ERP System (SAP).

AA10	I have a hard time focusing on what my ERP System (SAP) instructor tells me to do.

Perceived Usefulness	
PU01	Using the SAP would make it easier to do my job.
PU02	Using the SAP would improve my performance.
PU03	Using the SAP in my job would increase my productivity.
PU04	Using the SAP in my job would enable me to accomplish tasks more quickly.
PU05	I believe I would find the SAP useful in my job.
PU06	Using the SAP would enhance my effectiveness on the job.

Perceived Ease of Use	
PEOU01	I believe I would find the SAP easy to use.
PEOU02	My interaction with the SAP would be clear and understandable.
PEOU03	It would be easy for me to become skillful at using the SAP.
PEOU04	Learning to operate the SAP would be easy for me.
PEOU05	I believe I would find the SAP to be flexible to interact with.
PEOU06	I believe I would find it easy to get the SAP to do what I want it to do.

Demographics:

1. Gender:
   - ☐ Male
   - ☐ Female

2. Occupation:

☐ Student, Major:_____

☐ Professional, :_____

☐ Others

3. Age: _____ (in years)

4. Nationality: _____

5. The highest level of formal education that I have completed is:
   - ☐ Some College
   - ☐ College Graduate
   - ☐ Some Graduate Work
   - ☐ Graduate Degree

8. What is your work experience:
   - ☐ less than 1 year
   - ☐ 1-5 years
   - ☐ 5-10 years
   - ☐ more than 10 years

9. What is your Information technology (IT) experience:
   - ☐ less than 1 year
   - ☐ 1-5 years

☐ 5-10 years
☐ more than 10 years

Appendix 2 – Construct Definitions

Essay 1

Construct	Definition
Attitude	An individual's positive or negative feeling (evaluative affect) about performing the target behavior (Fishbein and Ajzen, 1975, p. 216)
Behavioral intention	The degree to which a person has formulated conscious plans to perform or not perform some specified future behavior.
Perceived ease of use	The degree to which a person believe that using an IT would be free of effort (Davis, 1989, p. 320)
Perceived usefulness	The degree to which a person believe that using an IT would enhance his or her job performance" (Davis, 1989, p. 320)
Perceived anxiety/fear	The degree of an individual's apprehension, or even fear, when she/he is faced with the possibility of using an IT (Venkatesh, 2000, p. 349)
Perceived enjoyment	The activity of using an IT is perceived to be enjoyable in its own right, aside from any performance consequences resulting from system use (Vekatesh, 2000, p. 351)
Perceived control	the extent to which people assume they can control events and outcomes of importance (Lazarus and Folkman, 1984, p. 66)
Commitment	Express what is important to the person, what has meaning for him or her (Lazarus and Folkman, 1984, p. 56)
Social Norms	The person's perception that most people who are important to him think he should or should not perform the behavior in question (Fishbein and Ajzen, 1975, p. 302; Venkatesh and Davis, 2000)

Essay 2

Espoused Cultural Value	Definition
Uncertainty Avoidance	Uncertainty avoidance is the level of risk accepted by the individual, which can be gleaned by his/her emphasis on rule obedience, ritual behavior, and labor mobility. This dimension examines the extent to which one feels threatened by ambiguous situations.
Individualism/Collectivism	Degree to which the individual emphasizes his/her own needs as opposed to the group needs and prefers to act as an individual rather than as a member of a group.
Masculinity/Femininity	The degree to which gender inequalities are espoused by an individual. Individuals who espouse masculine values emphasize work goals such as earnings, advancement, competitiveness, performance, and assertiveness. On the other hand, individuals who espouse feminine values tend to emphasize personal goals such as a friendly atmosphere, comfortable work environment, quality of life, and warm personal relationships.
Power Distance	Degree to which large differentials of power and inequality are accepted as normal by the individual. Power distance will condition the extent to which the employee accepts that his/her superiors have more power.

Source: Srite and Karahanna (2006) p. 682

VII. CURRICULUM VITAE

Chun-Lung (Nic) Huang

Phone: (415) 373-7550
email2nic@yahoo.com

192 Chestnut Ridge Dr. #D
Harrisonburg, VA 22801

Education

PhD	Management Information Systems University of Wisconsin – Milwaukee Dissertation: Three Essays on the Effects of Appraisal, Cultural, Emotional, and Cognitive Factors on Information Technologies Acceptance and Use Dissertation Committee: Dr. Mark Srite (Chair), Dr. Huimin Zhao, Dr. Derek Nazareth, Dr. Ed Levitas, and Dr. Xiaojing Yang	May, 2016
MSBA	Management Information Systems San Francisco State University Thesis: Viability of MESH Wireless Networks Thesis Committee: Dr. Paul Beckman (Chair) and Dr. Sameer Verma	Dec, 2004
MS	Leisure Studies and Services University of Oregon	Dec, 1994
BS	Civil and Hydraulic Engineering Chung Yuan Christian University, Chung-Li, Taiwan	May, 1988

Professional Experiences

Visiting Assistant Professor	Showker College of Business James Madison University, Harrisonburg, VA ▪ Teaching courses, advising students, and servicing department and college	2014 - Present
Adjunct Instructor	Sheldon Lubar School of Business University of Wisconsin – Milwaukee, WI ▪ Teaching courses and advising students	2011 - 2013

Teaching Assistant	Sheldon Lubar School of Business University of Wisconsin – Milwaukee, WI ▪ Teaching MS Access and Excel and SAM 2010 simulation in lab ▪ Teaching processing tools in operation management	2006 - 2011
Project Assistant (SAP)	The SAP University Competence Center (UCC) Sheldon Lubar School of Business University of Wisconsin – Milwaukee, WI ▪ Coordinating other universities' SAP program and Lubar's UCC ▪ Maintaining SAP accounts, cloud computing services	2007-2008
Manager	Sun-Chi International Holding Inc. Taipei, Taiwan	1997 - 1999
Manager	Sheng-Chi of California, San Francisco, CA	1996 - 1997
Real Estate Agent	Masson McDuffie Real Estate, San Francisco, CA	1995 - 1996

Publications

- Haried, P., & Huang, C. L. (2014). Managing International Information Technology Project Relationships: An Agency Theory Perspective. International Journal of Information Technology Project Management (IJITPM), 5(2), 1-13[6].

- Huang, C. L., & Srite, M. (2008). Cultural Differences and Technology Adoption in Mobile Banking. (Submitted and accepted by 9th Global Information Technology Management Association (GITMA)

Teaching Experiences

CoB 204	Introduction to Computer Information Systems (MS Access)	2014 - Present
BUS ADM 531	Information Technology Infrastructure for Business (Telecommunication, network technology, and	Spring, 2012

[6] See: http://www.igi-global.com/article/managing-international-information-technology-project-relationships/116054

	security)	
BUS ADM 530	Introduction to eBusiness	Fall, 2012 Fall, 2011
BUS ADM 230	Introduction to Information Technology Management (MS Access & Excel)	Summer, 2013 Winter, 2013 Summer, 2012

Conference Proceedings and Presentations

- "How Anticipatory Anxiety Impacts Technology Acceptance Model (TAM), Decision Making, and Job Performance", (Decision Science Institute 2013 at Baltimore, Maryland. November 17, 2013)

- "Cultural Differences and Technology Adoption in Mobile Banking" (9th *Global Information Technology Management Association* (GITMA) – co-authored with Dr. Mark Srite, Presented in Atlanta, Georgia, USA, June 22nd - 24th, 2008.

Working Papers and Research Projects

- Social Media, Privacy, Security, and True Feelings in Emoji
- How Anticipatory Anxiety Impacts Technology Acceptance Model (TAM), Decision Making, and Job Performances
- Connecting the Dots: Appraisal, Emotions, and Cognition on Information Technology Acceptance
- Cultural Differences and Technology Adoption in Mobile Banking Software-as-a-Service (SaaS) and Web 2.0: Building a Lexicon for Interoperability of Web Services in the Retail
  Industry
- Piracy on Intellectual Property: Factors influence online illegal file sharing
- Determinant factors from using collaborative information technology (Web 2.0) in virtual teams

Research Interests

- Individual and/or group behavioral effects on the adoption of Enterprise Resource Planning (ERP) technology
- Information systems security management and assurance

- eBusiness, social media, and network technologies
- Cultural, emotional, cognitive, and personality factors impacting HCI
- Communication theories and models with IT use
- Networking and network effects on eBusiness, virtual group, knowledge management, and IT trend
- Finding orders from chaos (what, why, and how to capture useful information from data)

Teaching Interests

- MIS courses: Information Systems and Technologies management courses, Network Security, Database Management, System Development and Analysis, Telecommunications and Network technologies, Business Intelligence and Business Analytics
- HCI courses: User Interface Design concepts, Social Issues (ethics, culture, gender, age, race, social status), IT innovations and Entrepreneurship, in Information Systems and Technologies

Professional Services

- Advise students changing major to Computer Information Systems
- New Textbook Search committee 2014
- Reviewer for Global Information Technology Management Association (GITMA) 2014 & 2015
- Reviewer for Northeast Decision Science Institute (NEDSI) 2014 – "MIS/IS/DSS/AI/Info Security/Expert Systems" Track
- Reviewer for International Conference on Information Systems (ICIS) 2013
- Reviewer for Americas Conference on Information Systems (AMCIS) 2013
- Reviewer for Global Information Technology Management Association (GITMA) 2008

Professional Affiliations

- Association for Information Systems (AIS), Member since 2010
- Decision Support Institute (DSI), Member since 2012
- MIS Ph.D. Student Club – University Wisconsin–Milwaukee, Member since 2006. Club President 2008

References

Dr. Mark Srite
Associate Professor
University of Wisconsin – Milwaukee
Sheldon Lubar School of Business
Lubar Hall N365
3202 N Maryland Ave
Milwaukee, WI 53211
Phone: (414) 229-5502
E-mail: msrite@uwm.edu

Dr. Art Gowan
Professor and Head of the Computer Information Systems Department
James Madison University
College of Business MSC 0202
Zane Showker Hall
Harrisonburg, Virginia 22807
(540) 568-8796
E-mail: gowanja@jmu.edu

Dr. Peter Haried
Associate Professor
Information Systems
University of Wisconsin-La Crosse
237 Wing Technology Center
La Crosse, WI 54601
(608) 785-8103
Email: pharied@uwlax.edu