THE HIPPOCAMPUS AND ADULT NEUROGENESIS: A NEURAL CIRCUIT WITH A COMMON ROLE IN BEHAVIORAL FLEXIBILITY AND DETAILED MEMORY

by

Brian Pochinski

A Thesis Submitted in

Partial Fulfillment of the

Requirements for the Degree of

Master of Science

in Psychology

at

The University of Wisconsin-Milwaukee

December 2014

ABSTRACT
THE HIPPOCAMPUS AND ADULT NEUROGENESIS: A NEURAL CIRCUIT WITH A COMMON ROLE IN BEHAVIORAL FLEXIBILITY AND DETAILED MEMORY

by

Brian Pochinski

The University of Wisconsin-Milwaukee, 2014
Under the Supervision of Professor Swain

Work with patient H.M. sparked great interest in the role of the hippocampus in learning and memory. Later, the findings that new neurons are born in the adult dentate gyrus (DG) and that they become functionally integrated in neural circuits created new excitement in the field of learning and memory. While there is ample evidence that the hippocampus and adult neurogenesis are involved in learning and memory, similar inconsistencies in both areas have clouded interpretations of their precise role. We propose that studying the role of hippocampus and neurogenesis in the DG must be merged into a more cohesive field of study. The neural circuit between the hippocampus and new neurons born in the DG form a network crucial for detailed memories and behavioral flexibility. The immature and highly excitable adult-born principle cells in the DG make up the active population of principle cells in the DG while the more mature cells are relatively silent. The young and excitable adult born cells initially form synapses with other cells. These synapses with cells that have pre-existing synapses may allow for the reinstatement and strengthening of old as well as the ability to acquire new learning in a familiar context. Despite extensive inputs to the DG, the only output of the DG is to the hippocampus. The hippocampus has extensive inputs and outputs with numerous brain regions making it suitable to serve as an index of memory representations. Thus, any information processed in the DG must be sent to the hippocampus which is in turn capable of indexing detailed memory representations and flexible behaviors.

TABLE OF CONTENTS

SECTION PAGE

I: Introduction…… 1

II: Hippocampal connectivity…… 8

III: The role of the hippocampus in memory…… 13
Lesions and distributed learning…… 15
Detailed versus generalized memories…… 17
Spatial learning and memory…… 19
Temporal discontiguity…… 20
Indexing cortical representations…… 22

IV: Extrahippocampal structures involved in memory…… 25

V: Development of adult-born neurons…… 29

VI: Neurogenesis and memory…… 32
Neurogenesis and pattern separation…… 33
Neurogenesis and detailed memory…… 34
Neurogenesis and forgetting…… 36
Neurogenesis and temporal information…… 37
Neurogenesis and memory consolidation…… 38

VII: Merging research on the hippocampus with DG neurogenesis…… 41

VIII: Questions and future directions…… 44

References…… 47

LIST OF FIGURES

Figure 1: an image of the hippocampal formation from Amaral and Witter (1989)……. 11

Figure 2: a simplified diagram of hippocampal connectivity…… 12

Figure 3: data from Alvarez et al. (2012)…… 23

Figure 4: data from Tanaka et al., (2014)……. 24

Figure 5: immediate early gene activity is increased in cortical regions but not CA1 by incorporating new paired-associates into an existing schema (Tse et al., 2011)……. 29

Figure 6: a comparison of radial arm mazes used to measure pattern separation taken from Groves et al. (2013) and Clelland et al. (2009), respectively…….. 40

LIST OF TABLES

Table 1: a comparison of the impact that hippocampal lesions and manipulations of neurogenesis in the DG on memory…… 42

Section 1

Introduction

Major interest in the role of the hippocampus in learning and memory came after Scoville and Milner (1957) reported profound memory deficits in patient H.M. after the removal of his hippocampus and other medial temporal lobe (MTL) structures. H.M. displayed profound anterograde amnesia and a temporally graded retrograde amnesia. H.M. could not learn new explicit information and he could not remember things that happened recently prior to his surgery. H.M. could, however, remember information from remote time periods from earlier in his life. This finding led to the idea that the hippocampus is involved in encoding memories and retrieving recent memories. With time however, memories can become consolidated and become independent of the hippocampus (Squire and Wixted, 2011; McClelland, McNaughton, and O'Reilly, 1995; Buzsaki, 1996). These consolidated memories are believed to be primarily stored in cortical regions.

The assumption that memories can become independent of the hippocampus has been met with contention based on inconsistent findings that may be due to residual tissue spared in animal lesion studies (Sutherland, Sparks, and Lehmann, 2010). One early study found that hippocampal lesions impair contextual fear memory at recent time periods, but not at remote time periods (Kim and Fanselow, 1992). Other studies, however, using more extensive hippocampal lesions found that contextual fear memory is impaired even at remote time points (Lehmann, Sparks, Spanswick, Hadikin, McDonald, and Sutherland, 2009; Lehman, Lacanilao, and Sutherland, 2007). Moreover, when damage extends beyond the hippocampus into adjacent MTL regions as was the case with H.M., memory impairments are more severe than when only the hippocampus is damaged (Zola-Morgan, Squire, and Ramus, 1994).

It should be noted that although the recall of a single experience may be dependent on the hippocampus (Lehmann et al., 2009; Lehman et al., 2007), distributed learning sessions can lead to a memory trace that is independent of the hippocampus (Lehmann et al., 2009). Distributed learning allows for a previous memory to become reactivated. Reactivations reinstate a period of hippocampal-dependency (Alvarez et al., 2012; Winocur, Frankland, Sekeres, Fogel, and Moscovitch, 2009); however, the hippocampal-dependent period becomes shorter with subsequent reactivations (Debiec, LeDoux, and Nader, 2002). Reactivations can also prevent the generalization of a memory are associated with the reinstatement of hippocampal-dependency (Alvarez et al., 2012). Thus, although more extensive hippocampal lesions can have a more severe impact on memory, the training techniques used can also impact the results.

Regardless of distributed learning, the hippocampus appears to be required for detailed but not generalized memory (Tse et al., 2007; Winocur, Moscovitch, Fogel, Rosenbaum, and Sekeres, 2005; Winocur, Moscovitch, Rosenbaum, and Sekeres, 2010; Winocur et al., 2009; Alvares et al., 2012; Wiltgen et al., 2010). Detailed memory is similar to the concept of pattern separation which allows for the discrimination of similar experiences (Yassa and Stark, 2011). When contextual fear conditioning is conducted in either a simple or complex environment, hippocampal lesions impair memory for the complex environment much more than for the simple environment (Moses, Winocur, Ryan, and Moscovitch, 2007). There is significantly less freezing in the complex environment compared to the simple environment. Similarly, mice that cannot discriminate between context A and context B are not impaired by inactivating the hippocampus, but mice that can discriminate between context A and context B are impaired by inactivating the hippocampus (Wiltgen et al., 2010).

The idea the hippocampus helps to index memory traces stored in the cortex (Teyler and DiScenna, 1986) is supported by recent work. Tanaka et al. (2014) found that

optogenetically silencing hippocampal cells that were active during learning decreased the amount of immediate early gene activity cortical cells. Furthermore, Cowensage et al. (2014) found that inactivating the hippocampus impaired contextual fear memory, but optogenetically activating the cortical cells that were active during learning could reinstate the contextual fear memory regardless of hippocampal inactivation. Thus, the hippocampus is required to index memory representations stored in the cortex. However, artificially activating those cells in the cortex is sufficient to reinstate the neural ensembles that are naturally indexed by the hippocampus.

Similar to contextual memory, detailed spatial memory seems to depend on the hippocampus. Numerous studies have found that hippocampal lesions impair memory in the Morris Water Maze (MWM) (Clark, Broadbent, and Squire, 2005; Martin, de Hoz, and Morris, 2005; Bolhuis, Stewart, and Forrest, 1994; Sutherland et al., 2001; Winocur, Sekeres, Binns, and Moscovitch, 2013).In the MWM, the animal is required to find a hidden platform based on numerous cues. Thus, the MWM requires the animal to find a spatial location based on the integration of multiple cues in the environment. Hippocampal lesions given at both recent and remote time periods impair performance on probe trials in the MWM (Winocur et al., 2013). Animals with hippocampal lesions spend less time in the proper training quadrant on probe trials. Furthermore, hippocampal lesions impair performance in the radial arm maze when the arms are adjacent but not for non-adjacent arms (McDonald and White, 1995). Thus, memory is only impaired when more detail is required. However, hippocampal lesions do not impair generalized or schematic spatial memory (Winocur et al., 2010; Tse et al., 2007). Animals that learn a spatial schema of paired-associates are not impaired by hippocampal lesions (Tse et al., 2007). New information can even be rapidly incorporated into an existing schema despite hippocampal lesions. However, the spatial schemas are inflexible. Other work supports the

notion that the hippocampus is required for flexible behavior (Ramos and Vaquero, 2000). Thus, the hippocampus is crucial for detailed memory and flexible behavior.

Besides contextual and spatial information, the hippocampus is also involved in the temporal aspects of a memory. Hippocampal lesions impair eye blink conditioning when there is a trace inter-stimulus-interval, but not when the conditioned stimulus and unconditioned stimulus coincide for a period of time (Solomon, Vander Schaaf, Thompson, and Weisz, 1986; Moyer, Deyo, and Disterhoft, 1990; Beylin, Gandhi, Wood, Talk, Matzel, and Shors, 2001). There are also time cells in the hippocampus that fire at specific time periods during a temporal delay that are able to retime if the temporal parameters of the sequence change (MacDonald, Lepage, Eden, and Eichenbaum, 2011). Thus, the hippocampus is not just required for linking together detailed contextual and spatial information. The hippocampus is also required to link the temporal aspects of a memory.

With sufficient learning, memories that were once dependent on the hippocampus can become independent of the hippocampus. With time and experience, tasks become more dependent on the striatum (Chang and Gold, 2003). The transition towards striatal-dependence coincides with an increase in cholinergic activity in the striatum and a shift from a spatial strategy to an inflexible response based strategy. Furthermore, intracaudate injections of glutamate speeds up the rate that animals switch from a spatial strategy to a response based strategy (Packard, 1999). Furthermore, hippocampal lesioned animals show a strong tendency toward using an inflexible response based strategy (Ramos and Vaquero, 2000). Thus, the hippocampus is not required when an inflexible response based strategy is sufficient for performance.

Besides the striatum, it is widely acknowledged that many memories are eventually stored in the cortex (Nadel and Moscovitch, 1997; Moscovitch et al., 2005; Squire and Wixted,

2011; McClelland, McNaughton, and O'Reilly, 1995; Buzsaki, 1996). H.M. was not impaired on memories at remote time periods suggesting that memories can become independent of the hippocampus (Scoville and Milner, 1957). Furthermore, using optogenetics to silence the anterior cingulate cortex (ACC) impairs remote, but not recent memory (Goshen et al., 2011). Incorporating new paired-associates into an existing schema increases immediate early gene activity in cortical areas including the prelimbic cortex, ACC, and retrosplenial cortex (RSC) indicating cortical involvement in incorporating new information into existing schemas (Tse et al., 2011). Moreover, the mPFC is required in remote memory trace conditioning because mPFC, but not hippocampal lesions impair remote trace memory (Takehara, Kawahara, and Kirino, 2003). Thus, numerous studies show that cortical regions are involved in memory and can even be necessary in the case of remote memories.

About a decade after the report of H.M. (Scoville and Milner, 1957), Altman and Das (1965) reported that new neurons are born in the DG of the hippocampal formation of the adult brain. While this finding was largely ignored at first, it is now well accepted that neurogenesis occurs in the adult mammalian brain. However, like the role of the hippocampus in memory, the potential roles for new neurons in the adult hippocampus are intensely debated (Leuner, Gould, and Shors, 2006; Ming and Song, 2011; Deng, Aimone, and Gage, 2010; Sahay, Wilson, and Hen, 2011; Aimone, Deng, and Gage, 2011; Zhao, Deng, and Gage, 2008).

Just as the hippocampus is believed to be involved in pattern separation (Deuker, Doeller, Fell, and Axmacher, 2014; Rolls, 2013; Yassa and Stark, 2011), a prominent theory posits that the major role of neurogenesis is pattern separation (Sahay et al., 2011). Pattern separation allows for similar sensory inputs to be processed differently and produce different behaviors depending on the context of the sensory inputs. Pattern separation, thus allows for detailed memories which appears to benefit from neurogenesis (Clelland et al., 2009; Wu and Hen,

2014). Major support for the role of neurogenesis in pattern separation comes from a study conducted by Clelland et al. (2009) which showed that suppressing neurogenesis impairs pattern separation on tasks where there was little spatial separation between correct and incorrect choices. However, suppressing neurogenesis did not impair tasks when there was larger spatial separation. Similarly, increasing neurogenesis improves pattern separation (Sahay et al., 2011).

Interestingly, it is specifically young adult-born cells that contribute to pattern separation while the older and more mature cells contribute to pattern completion (Nakashiba et al., 2012). Mice with the output of more mature GCs blocked were still able to distinguish between similar contexts, but blocking neurogenesis impaired the ability to distinguish similar contexts. Thus, a new pool of adult-born GCs is required for detailed memory requiring pattern separation.

Similar to proposals that the hippocampus is involved in detailed memories (Wiltgen and Tanaka, 2013), some have claimed that the role of neurogenesis is to enhance the precision of memories (Aimone et al., 2011; Lacar, Parylak, Vadodaria, Sarkar, and Gage, 2014). While not suggesting an idea radically different from pattern separation, Aimone et al. (2011) suggest that neurogenesis increases the resolution of memories. Suppressing neurogenesis impairs discriminations when contexts are made similar (Wu and Hen, 2014) and increasing neurogenesis improves contextual fear conditioning in similar contexts (Sahay et al., 2012). Because the hippocampus and neurogenesis in the DG are crucial for highly detailed memories, they may form a neural network that is crucial for highly detailed memories. Neuroanatomy supports this proposition. The DG and CA3 have reciprocal connections (Scharfman, 2007), and information in both DG and CA3 must be sent through CA1 as output from the hippocampus. Thus, the reason why similar impairments are observed when either suppressing neurogenesis

in the DG or lesioning the hippocampus is that they form a neural circuit crucial for detailed memories.

Young adult-born GCs have unique and transient properties that may contribute to their role in memory. Cells between four and six weeks old display enhanced plasticity and excitability (Ge, Yang, Hsu, Ming, and Song, 2007; Marin-Burgin, Mongiat, Pardi, and Schinder, 2012). The mature GC population appears to be relatively silent (Alme et al., 2010). GCs at one month old are more easily activated than mature cells because mature cells have strong GABAergic inhibition (Marin-Burgin et al., 2012) Adult-born GCs also form synapses with cells that have pre-existing synapses (Toni et al., 2007; Toni et al., 2008). Thus, it seems that the young and active population of GCs has both the capacity to obtain new information from their increased excitability, and also to access older information that has already been stored in existing synapses. The increased excitability of cells that can also obtain information stored in prior memories could allow for strengthening of cortical memory traces (Nadel and Moscovitch, 1997) and strengthening of the index of cortical memory traces (Tyler and DiScenna, 1986). The strengthening of memory traces could increase the detail stored in these memories. The capacity of new cells to both obtain new information and access prior information makes neurogenesis an ideal candidate mechanism for flexible behavior. Based on an animal's prior experience, it could remember what behavior was adaptive in a particular context. Then, if what was an adaptive behavior changes, the excitable immature cells could help to store the new information and the new adaptive behavior could be performed in the future.

The premise of the current review is that the hippocampal literature should be merged with the neurogenesis literature because the hippocampus and DG form a neural circuit crucial for memories that are rich in detail and behavioral flexibility. Furthermore, it appears that young adult-born GCs are the active population of GCs with more mature GCs being relatively silent

(Alme et al., 2010; Marin-Burgin et al., 2012). Thus, either lesioning the hippocampus or suppressing neurogenesis can impair memory when precise details must be retrieved, or when behavior must be flexible. However, when an inflexible response strategy or schematic memory is sufficient for performance, then lesioning the hippocampus or suppressing neurogenesis does not impair memory. Memory is not impaired because extrahippocampal structures in the striatum and cortex are sufficient for response-based memory and schematic memory, respectively (Moscovitch et al., 2005; Chang and Gold, 2003). It is, however, important to note that schemas and habits require sufficient learning experiences for them to develop. Thus, one-trial learning is impaired by hippocampal lesions.

We will first begin by discussing the anatomy of the hippocampal formation, and both the intrinsic and extrinsic connections. Next, we will discuss the role of the hippocampus and extra hippocampal structures in learning and memory. Afterwards, we will discuss the development of adult-born GCs in the DG followed by their role in memory. Finally, we will discuss the possibility that a major function of adult-born neurons in the DG may relate to many of the same inconsistencies found in memory research using lesion studies and hippocampal amnestics.

Section 2

Hippocampal connectivity

The hippocampal formation is shown in *Figure 1,* and it is composed of the DG, the hippocampus proper (CA1, CA2, and CA3), the subicular complex (subiculum, presubiculum, and parasubiculum), and entorhinal cortex (EHC) (Amaral and Witter, 1989). The DG is composed of the molecular layer, the granule cell layer, and the polymorphic or deep layer (Amaral, Scharfman, and Lavenex, 2007). The molecular layer contains the dendrites of GCs,

interneurons, and fibers of the perforant path (PP) from the EHC. The granule cell layer contains densely packed GCs. The granule cell layer also contains inhibitory pyramidal basket cells (Amaral et al., 2007). Pyramidal basket cells form synapses with the cell bodies of GCs. The polymorphic layer contains a number of cell types including the mossy cell. Mossy cells have major contralateral projections to the DG. The mossy cell has its name because their dense spines and “thorny excrescences” covering the proximal dendrites near the soma make it look like the cell is covered in moss (Amaral, 1978).

The hippocampus proper consists of CA1, CA2, and CA3 (Amaral and Witter, 1989). The pyramidal cell is the principle cell in the hippocampus proper and is the major component in the pyramidal cell layer. Above the pyramidal cell layer is the *stratum radiatum* and the stratum *lacunosum-moleculare* which contain apical dendrites of pyramidal cells. Below the pyramidal cell layer is the *stratum oriens* which contains basal dendrites of pyramidal cells. Like the DG, the hippocampus proper also contains GABAergic basket cells (Schwarzkroin, Scharfman, and Sloviter, 1990).

GCs, the principle cell type in the granule cell layer of the DG, send mossy fibers to CA3 (Scharfman, 2007). GCs innervate more inhibitory cells than excitatory cells in CA3, and thus, activation of GCs inhibits activity in CA3 (Acsady, Kamondi, Sik, Freund, and Buzsaki, 1989). CA3 has recurrent collateral projections to itself and projections to CA1 which are commonly referred to as Schaffer collaterals (Amaral and Witter, 1989). The projections from CA3 to both CA3 and CA1 innervate cells in the *stratum oriens* and *stratum radiatum* but not the *stratum lacumosum-moleculare* (Hjorth-Simonsen, 1973). Supported by computational modeling, the recurrent collaterals that project from CA3 back to CA3 are believed to form and autoassociation network (Treves and Rolls, 1994; Rolls, 2013). This autoassociation network can operate as a single network and can allow arbitrary information from numerous cortical regions to be linked

into a coherent representation. Thus, the cortical regions that store the representations needed to recall the numerous features and aspects that compose an event in a particular context can be associated with one another despite an arbitrary relationship. While the trisynaptic pathway which consists of the EHC sending projections to the DG which has output to CA3 which finally projects to CA1 (Amaral and Witter, 1989), the flow of information in the hippocampus is not strictly unidirectional. CA3 sends back projections to the GABAergic cells in the DG (Scharfman, 2007).

In addition to studying the intrinsic connections of the hippocampus, it is also important to understand its extrinsic connections in order to understand the information it receives and sends. Hippocampal connections can be seen in *Figure 2*. The hippocampus has extensive connections with other brain regions and is believed to serve as a hub during memory retrieval (Watrous et al., 2013). Hubs have a high degree of functional connectivity with other cells (Bullmore and Sporns, 2009), and it has been shown that the MTL displays a high degree of functional connectivity with the frontal lobe (FL) and parietal lobe (PL) during memory retrieval for both spatial and temporal information (Watrous et al., 2013). It is specifically GABAergic neurons in CA3 that serve as hubs whereas CA3 pyramidal cells do not (Bonifazi et al., 2009). Hub neurons promote synchronization of neural activity in the hippocampus which plays a crucial role in memory formation and retrieval (Fell and Axmacher, 2011). Furthermore, it has been shown that pathological conditions that involve memory impairments such as Alzheimer's disease (AD) are associated with the loss of hub properties of the hippocampus (Ciftci, 2011). Thus, maintaining the hub property of high functional connectivity which promotes synchronization in the hippocampus may be crucial for memory.

The EHC sends projections to the DG, CA3, CA1, and the subiculum (van Groen, Miettinen, and Kadish, 2003). The EHC has both excitatory and inhibitory connections with the

DG (Scharfman, 2007). Responses of CA3 pyramidal cells often precede the response of DG pyramidal cells (Yeckel and Berger, 1990), thus, CA3 should be thought of as the first site of synaptic transmission instead of the DG as is assumed by the trisynaptic pathway. Furthermore, activation of CA3 just prior to mossy fiber activation induces long-term potentiation (LTP) at CA3 synapses whereas reversing the timing induces long-term depression (LTD) (Brandalise and Gerber, 2014). Thus, the simplified conception that the trisynaptic pathway flows from the EHC to the DG and then CA3 is not truly correct. CA3 receives EHC input which can then be sent to the DG and then back to CA3. It is, however, unclear whether or not the back projection preferentially targets mature or immature GCs.

The perirhinal cortex (PHC) sends projections to CA1, the subiculum (Naber, Witter, and Lopes da Silva, 1999), and the DG (Vivar et al., 2012). The DG also receives projections from septal cholinergic cells, the horizontal nucleus of the diagonal band of Broca, and the mammillary bodies. The projections from the mammillary bodies are glutamatergic (Kiss, Csaki, Bokor, Shanabrough, and Leranth, 2000). The nucleus reuniens (NR) of the thalamus forms synapses with CA1 and the subiculum (Wouterlood, Saldana, and Witter, 1990). CA1 receives cortical projections from the temporal lobe (TL) and PL (Rockland and van Hoesen, 1999). Thus, given the extensive inputs of various types of sensory information to the hippocampus, it is well suited to serve as an index of cortical representations (Teyler and DiScenna, 1986).

The hippocampus also sends axons to numerous brain regions. CA1 makes connections with the medial, intercalated, and basomedial nuclei of the amygdala (Kishi, Tsumori, Yokota, and Yasui, 2006), hypothalamus, thalamus (Cenquizca and Swanson, 2006), EHC, PHC (Zhong and Rockland, 2004) and the subiculum (Arszovszki, Borhegyi, and Klausberger, 2014). CA1 sends cortical projections to the RSC (Miyashita and Rockland, 2007), TL (Yukie, 2000; Zhong and Rockland, 2004; Zhong, Yukie, and Rockland, 2005), the orbitofrontal cortex (OFC), and mPFC

(Zhong, Yuckie, and Rockland, 2006). Because CA1 provides the output from the hippocampus, information processed in the DG and the CA3 autoassociation network must be sent to CA1 before being sent to various cortical regions. Thus, even information processed in the DG must be relayed through the hippocampus proper before being sent to cortical regions. Given the extensive outputs of the hippocampus, it is also well suited in terms of its output to serve as an index of cortical representations (Teyler and DiScenna, 1986).

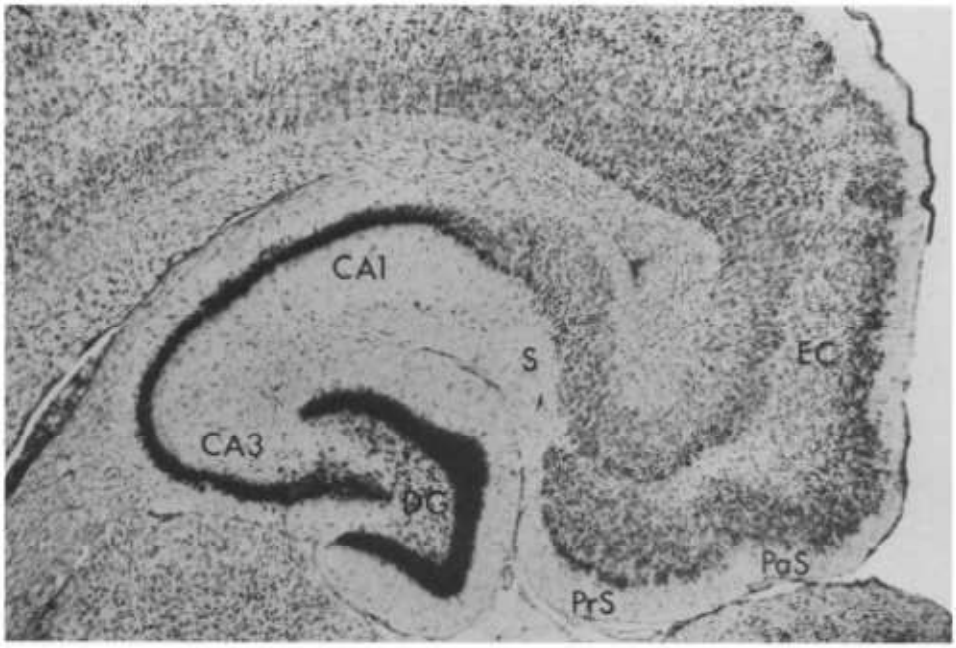

Figure 1: an image of the hippocampal formation from Amaral and Witter (1989).

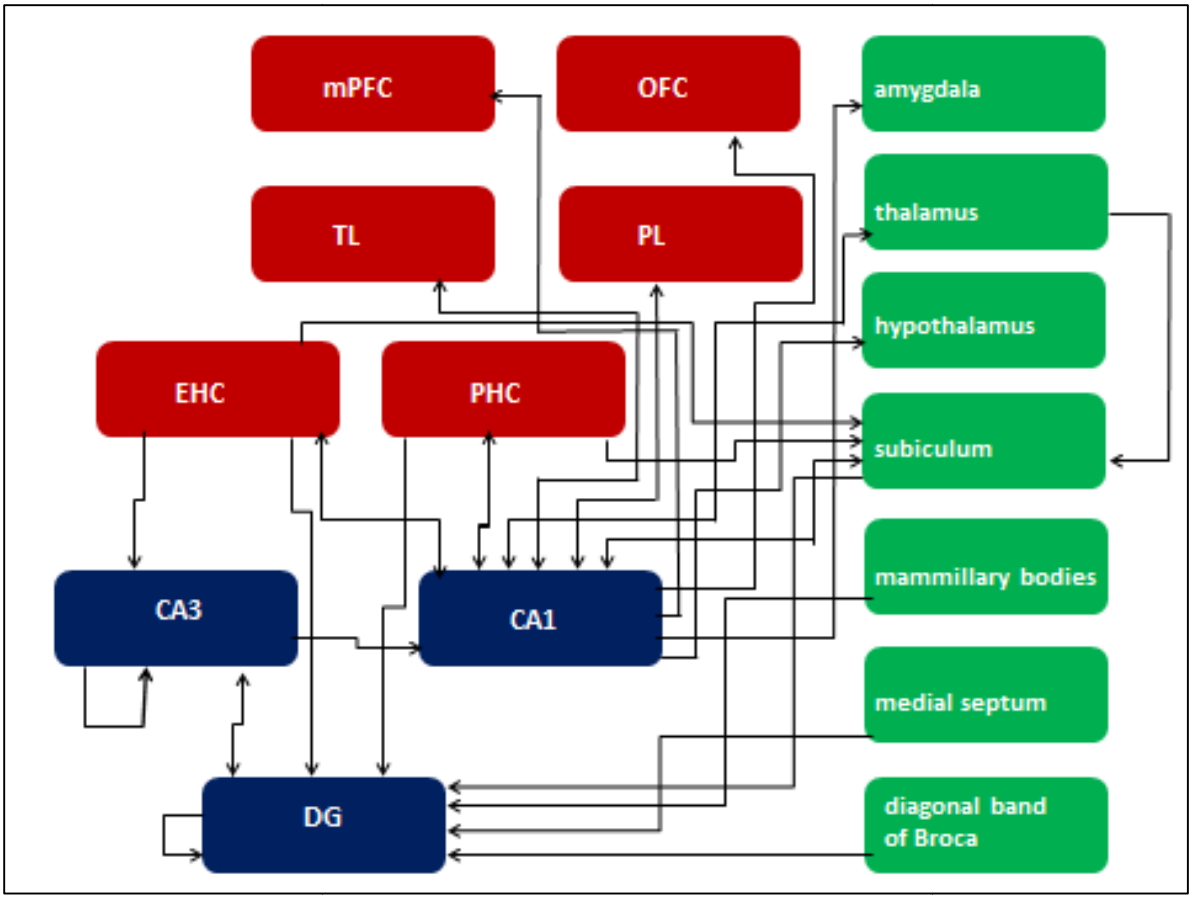

Figure 2: a simplified diagram of hippocampal connectivity. Cortical regions are shown in red, subcortical regions are shown in green, and hippocampal regions are shown in blue.

Section 3

The role of the hippocampus in memory

Patient H.M. experienced severe memory impairments after having portions of his MTL removed in order to treat his epilepsy (Scoville and Milner, 1957). H.M. displayed an anterograde and a temporally graded retrograde amnesia. While H.M. could not explicitly recall new information he learned after his surgery, some new learning could still occur. H.M. could learn procedural tasks such as reverse mirror drawing and learn implicit tasks involving priming. This provided support for the idea that there are multiple memory systems in the brain. H.M. also displayed a temporally graded retrograde amnesia leaving old memories intact but more

recent memories were impaired. This finding led to what is known as the Standard Model of Memory Consolidation. According to the Standard Model, recent memories are initially dependent on the hippocampus, but with time memories become consolidated and are stored in the cortex (Squire and Wixted, 2011; McClelland et al., 1995; Buzsaki, 1996).

There are important distinctions to make when discussing memory research. One distinction concerns recent compared to remote memory. Recent memory refers to memory up to a couple of weeks old whereas remote memory refers to memory that is a few weeks old or longer. There are also differences in semantic memory and episodic memory. Semantic memory is a declarative memory for facts and episodic memory is a declarative memory of single experience. Semantic memory is believed to be more schematic and gist-like whereas episodic memories are believed to be richer in contextual details for a period of time. Some, however, have noted that this distinction is not so clear (Moscovitch et al., 2005). They believe it is possible to have separate episodic and semantic representations that can coexist in the hippocampus and the cortex.

While the hippocampus undoubtedly plays some role in memory, there has been much debate on the role of the hippocampus in recent and remote memory (Sutherland et al., 2010; Squire and Wixted, 2011; Winocur, Moscovitch, and Sekeres, 2013; Wiltgen and Tanaka, 2013). This debate is partially due to the inconsistent results in behavioral testing. While there is more consensus regarding the involvement of the hippocampus in recent memory, there is greater dispute on remote memory. Some groups have placed great emphasis on lesion extent and the distribution of learning trials (Sutherland et al., 2010) whereas others have focused on the level of detail of memory representations and time since the formation of the memory (Wiltgen and Tanaka, 2013). Another group has proposed that critical factors such as the contextual

environment and pre-exposure to the environment play a crucial role in determining the role of the hippocampus in memory (Winocur et al., 2013).

3.1 Lesions and distributed learning

Contextual fear conditioning is one of the most common behavioral tests of the involvement of the hippocampus in memory. One of the earliest studies providing support for memories being consolidated into extrahippocampal regions came from Kim and Fanselow (1992). In their study, Kim and Fanselow (1992) found that hippocampal lesions impaired contextual fear memory for recent time periods, but not contextual fear memories that were 28 days old. However, given the incomplete lesions used by Kim and Fanselow (1992), it has been argued that the small lesions made were not sufficient to produce impairments because residual hippocampal tissue may be sufficient for memory retrieval (Sutherland et al., 2010).

Sutherland, O'Brien, and Lehmann (2008) found that damaging the dorsal, ventral, or complete hippocampus impaired one-trial learning of contextual fear conditioning. Partial damage caused less severe, yet consistent, memory impairments for two day old fear memories than complete damage. There was, however, no difference in memory impairments for partial and complete damage for memories that were 12 weeks old. It should be noted that the partial damage in Sutherland et al. (2008) was greater than the partial damage in Kim and Fanselow (1992), thus the animals in Sutherland et al. (2008) had less residual tissue spared. Furthermore, Lehmann et al. (2007) found that hippocampal lesions can impair one trial training contextual fear memories that are as old as six months, and that at one week after learning the amount of hippocampal damage is correlated with memory impairments. Thus, it appears that the hippocampus is always required for contextual fear memories of a single experience, even when testing is done at very remote time periods given sufficient lesion size.

Besides the impact that lesion size can have on results, recent evidence has shown that the timing of inactivation techniques also impact testing results. Goshen et al. (2011) used optogenetics to either precisely inactivate CA1 or used prolonged light for 30 minutes to inactivate CA1. While the precise light impaired both recent and remote memory, the prolonged light only impaired recent but not remote memory. The prolonged light was associated with more cells expressing c-Fos in the ACC and basolateral amygdala (BLA) suggesting that other brain regions can compensate for hippocampal inactivation with sufficient time. While this study showed that other brain regions can compensate for certain functions, this study did not attempt to identify the level of detail retained in the memories. Specifying the level of detail contained in contextual memories is important given that schematic hippocampal-independent memories contain less detail than contextually rich hippocampal-dependent memories (Winocur et al., 2013). Thus, it would be interesting to systematically examine the level of detail contained in contextual memories using prolonged and precise light techniques.

Besides the spatiotemporal dimensions of hippocampal lesions and the level of detail contained in a memory, the behavioral training procedures also impact the observed memory impairments. When contextual fear training is distributed across multiple sessions, hippocampal damage does not impair memory (Lehmann et al., 2009). Furthermore, animals with hippocampal lesions can still acquire contextual fear memories, albeit at a slower rate (Wiltgen, Sander, Anagnostraras, Sage, and Fanselow, 2006). However, regardless of whether or not animals received hippocampal lesions, sufficient pre-exposure time is required for the formation of contextual fear memories. This research shows that at least in some cases, contextual fear memories can become independent of the hippocampus. Unfortunately, Wiltgen et al. (2006) did not examine the level of detail contained in hippocampal lesioned animals that learned contextual fear conditioning. Given the importance of the hippocampus in detailed memory

(Wiltgen and Tanaka, 2013), learning detailed memory representations probably requires and intact hippocampus.

Using distributed learning sessions allows for previously acquired memories to become reactivated. Reactivating a fear memory by re-exposing the animal to a previously shocked environment prevents the fear memory from becoming hippocampal-independent and generalized (Alvarez et al., 2012; Winocur et al., 2009). Although reactivation can reintroduce hippocampal-dependency, reactivations lead to a shorter hippocampal-dependent period. Debiec et al. (2002) found that reactivating a memory for a third time produced a hippocampal-dependent period of less than two days as opposed to weeks. These differences in the length of the hippocampal-dependent period coincides with the finding that inhibiting DNA recombination impairs initial consolidation of a contextual memory but not reconsolidation (Colon-Cesario et al., 2006). Thus, the initial consolidation of a contextual memory requires exchanging genetic information whereas the reconsolidation of a contextual memory does not. Furthermore, the same spatial context experienced during initial learning is necessary and sufficient for incorporating new information into existing memories (Hupbach, Hardt, Gomez, and Nadel, 2008). These initial memories are automatically reactivated when re-exposed to the original learning environment. Thus, in the same spatial context, an initial learning experience is distinct from re-experiencing the same context at both a behavioral and biological level.

3.2 Detailed versus generalized memories

The idea that the hippocampus is required for the retrieval of detailed contextual information has seen tremendous attention and strong support recently (Wiltgen and Tanaka, 2013). As time passes, contextual fear memories become more generalized and lack detailed information (Wiltgen and Silva, 2007). Two weeks after contextual fear training, more than half

of the animals tested displayed generalized contextual fear to novel environments (Wiltgen et al., 2010). The animals that displayed a generalized fear memory froze equally for both the conditioned context A and the unconditioned context B. Animals that were able to discriminate contexts froze significantly more in the conditioned context A than the unconditioned context B. Furthermore, the animals that displayed a generalized fear response were not further impaired by hippocampal inactivation. Controls and the hippocampal lesion group showed the same levels freezing in the conditioned context A. However, animals that did not generalize their fear response were impaired by hippocampal inactivation. Other research has found that inactivating the hippocampus two days after contextual fear training, but not 28 days after contextual fear training impairs memory (Alvares et al., 2012). The differences in elapsed time after training and whether or not memory is impaired coincides with the ability to discriminate between novel and conditioned contexts (Alvares et al., 2012). A human patient study examining MTL epilepsy found that damage to the hippocampus impaired the retrieval of detailed episodic memories (St-Laurent, Moscovitch, Jadd, and McAndrews, 2014). Thus, the hippocampus appears to be required for detailed, but not schematic memory.

At least one study has challenged the idea that the hippocampus is not required for detailed remote contextual memory. Kitamura et al. (2012) used a one-trial place recognition test that tested mice in a novel or experienced environment. They used two different sized testing rooms and a circular and square chamber. This study found that hippocampal lesions did not impair remote memory or its precision. The animals were able to discriminate the two different rooms and the two different chambers. It is, however, unclear exactly how precise the memories were because the testing environments were fairly dissimilar. Future studies systematically manipulating differences between environments could help improve our understanding of how precise memories can be with and without an intact hippocampus.

3.3 Spatial learning and memory

One testing procedure that has shown consistent results regarding hippocampal lesions and memory is the MWM (Sutherland et al., 2010). Typical testing in the MWM requires the animal to find a hidden platform based on allocentric cues placed around the environment. Numerous studies have found that lesioning the hippocampus impairs performance in the MWM (Clark et al., 2005; Martin et al., 2005; Bolhuis et al., 1994; Sutherland et al., 2001; Winocur et al., 2013). Performance in the MWM is only impaired by hippocampal lesions, however, on the hidden platform version of the MWM when the animals must rely on spatial cues. Animals with hippocampal lesions can find a visible platform in the MWM (McDonald and White, 1994). Hippocampal lesions can even impair memory in the MWM in animals that had months of extensive training prior to the lesions being made (Clark et al., 2005). Thus, experience is not sufficient for accurate performance when a precise spatial location must be remembered, unlike schematic spatial memory (Tse et al., 2007). Testing in the radial arm maze has also shown that hippocampal lesions can lead to impairments. Animals with hippocampal lesions show impaired memory when the arms in the maze are adjacent but not non-adjacent arms (McDonald and White, 1995). Memory for adjacent arms requires a more detailed spatial representation than non-adjacent arms because adjacent arms have less spatial separation. Thus, research supports the idea that hippocampal lesions impair memory when more detail is required.

Although spatial memory in the MWM is impaired by hippocampal lesions, not all spatial memory is impaired by hippocampal lesions. In one study, rats were required to learn flavor-place associations in an environment (Tse et al., 2007). Hippocampal lesions made two days after learning a new pair of associates did not impair the spatial memory. Remote memory was

also intact after hippocampal lesions. Furthermore, once a spatial schema was established, rats could rapidly incorporate new paired-associates into their existing schema. Allocentric spatial information can also be maintained after hippocampal lesions are made when rats are reared in a complex environment (Winocur et al., 2005; Winocur et al., 2010). A patient study with a retired amnestic taxi driver who learned the streets of London 40 years prior was found to have fairly preserved spatial memory, however, it was found that he was reliant on major roads when navigating (Maguire, Nannery, and Spiers, 2006). Thus, similar to the results regarding contextual memory, although some spatial memories can be maintained and acquired with hippocampal lesions, detailed spatial memories always require the hippocampus.

Hippocampal lesion studies have also provided support for the role of the hippocampus in flexible behavior. Ramos and Vaquero (2000) trained animals in a spatial maze starting from a consistent location. During testing, animals were required to start from different starting locations. Animals with hippocampal lesions were impaired relative to controls. Importantly, animals with hippocampal lesions were significantly more likely than controls to choose the incorrect location that was congruent with the correct location for the original starting location. However, there was not a significant difference in the number of errors for locations incongruent with the original starting location. Furthermore, the schema formed in the animals in Tse et al. (2007) that then received hippocampal lesions was inflexible in the fact that the information contained in the schema did not transfer to novel environments. Thus, although some spatial memory can be intact after hippocampal lesions, the flexible use of that spatial strategy is impaired.

3.4 Temporal discontiguity

Delay and trace eye blink conditioning have also been used extensively to study hippocampal function. In delay conditioning, a tone is presented and a puff of air is directed into the animal's eye. With time the animal becomes conditioned to blink upon the presentation of the tone. Similarly, in trace conditioning, a tone is presented, but the air puff is presented shortly after the end of the tone. Thus, the trace conditioning includes a period of temporal discontiguity that requires two events being linked together. This is similar to linking the numerous features of a detailed environment to create a coherent context in contextual fear conditioning. Similarly, spatial navigation in the MWM requires numerous cues being linked together in order to find the location of the hidden platform. Because spatial navigation does not occur instantaneously, there is also a temporal aspect to the MWM. Thus, testing in the MWM cannot dissociate the impact of spatial cues from the temporal aspects. Trace conditioning can, however, dissociate spatial cues from the temporal aspects of a memory.

Evidence shows that hippocampal lesions impair trace but not delay conditioning (Solomon et al., 1986; Moyer et al., 1990; Beylin et al., 2001). Lesioning the EHC which sends its major output to the hippocampus can also impair trace conditioning (Ryou, Cho, and Kim, 2001). However, these results are once again dependent on the testing procedures used. For example, Kim, Clark, and Thompson (1995) found that hippocampal lesions impaired recent but not remote trace conditioning. Thus, memory for trace conditioning appears to go through consolidation similar to other types of memory.

Manipulating the trace and delay period can also impact the effect of hippocampal lesions. Complete hippocampal lesions do not prevent animals from acquiring the conditioned eye blink response at a 300 ms trace interval but using a 500 ms trace interval leads to impaired performance (Moyer et al., 1990). Furthermore, making the task more difficult by increasing the

delay period from 750 ms to 1400 ms reveals learning deficits after hippocampal lesions (Beylin et al., 2001). However, the lesioned animals can still eventually learn the task with the longer delay. Once the long delay has been learned by a hippocampal lesioned animal, the animal is then able to learn trace conditioning showing that trace conditioning can be learned without the hippocampus if proper training procedures are used (Beylin et al., 2001). It is, however, unclear whether or not this is because the animals are incorporating this information into an existing schema, similar to as what is observed with spatial information (Tse et al., 2007).

Besides evidence from trace conditioning, electrophysiological work has shown time cells exist in area CA1 (MacDonald et al., 2011). Rats were required to distinguish a sequence of two events separated by a ten second delay. If the object and odor presented in the sequence was the correct pair, the animal could dig for a reward. If the object and odor were not the correct pair the animal was rewarded for withholding from digging. The time cells fired differentially depending on how the sequence of events began and also at particular moments during the temporal gap. Furthermore, just as place cell can remap when spatial cues are altered (Muller and Kubie, 1987), time cells can retime when the temporal parameters of the sequence are altered (MacDonald et al., 2011). It is currently unclear if similar to how remote trace memories can become independent of the hippocampus (Kim et al., 1995), the information contained in time cells can eventually become hippocampal-independent.

3.5 Indexing cortical representations

If the hippocampus is indexing representations stored in the cortex, then inactivating the hippocampus should impact the cortical cell activity associated with memory. Tanaka et al. (2014) have recently provided support for the notion that inactivating the hippocampus impairs memory and neural activity in the cortex. *Figure 4* shows that inactivating the hippocampus

impairs contextual fear memory and leads to a decrease in immediate early gene activity in cells that were tagged during initial learning. Thus, the hippocampus is required to sufficiently recruit cortical regions that are necessary for memory retrieval. Furthermore, Cowensage et al. (2014) have provided complementary support for the role of the hippocampus in indexing cortical representations. Although inactivating the hippocampus impaired memory, optogenetically stimulating the RSC was able to activate the contextual fear memory regardless of hippocampal inactivation. Thus, under normal conditions the hippocampus is required to index the cortical representations. However, stimulating cortical cells that are active during learning is sufficient for memory retrieval and the hippocampus is not required.

A stronger hippocampal index of cortical memory traces could allow for more detailed memories that could represent more complex environments. Moses et al. (2007) used a single session fear conditioning paradigm in either a simple or complex environment. The simple environment consisted of white walls whereas the complex environment had clear walls with numerous stimuli situated around the room. Although hippocampal lesions impaired memory for both contexts, the effect was greater for the complex environment as shown by less freezing for the complex environment than the simple environment. Furthermore, hippocampal lesions led to generalization for the complex environment, but not the simple environment. The finding that generalization does not occur in the simple environment suggests that extrahippocampal regions capable of forming a schematic memory are sufficient to retain simple contextual information, but not detailed information consisting of numerous cues.

One theory proposes that a major function of the hippocampus is to index memory representations stored in neocortical regions (Teyler and DiScenna, 1986; Teyler and Rudy, 2007). The reason hippocampal lesions lead to generalized memory for the complex environment may be that the hippocampus is unable to index the necessary cortical regions

capable of representing the complex environment. Thus, all of the features and cues that compose the complex environment are not bound into a coherent cortical representation. Instead, only a generalized or schematic representation is possible. In a simple environment, such as one that only contains white walls, a precise index of cortical representations would not be as necessary because the representation of a single color could be sufficient to perform the task.

Besides indexing detailed memories, the hippocampus could also help to index multiple possible behavioral patterns allowing for flexible behavior. Hippocampal lesions impair behavioral flexibility and produce response-based strategies (Ramos and Vaquero, 2000). When the maze is rotated, animals with hippocampal lesions preferentially make errors that are congruent with the location that was correct prior to rotating the maze. Thus, the animals are unable to index a new behavioral pattern consistent with the altered incoming sensory information despite the fact that animals have already experience the incoming sensory information.

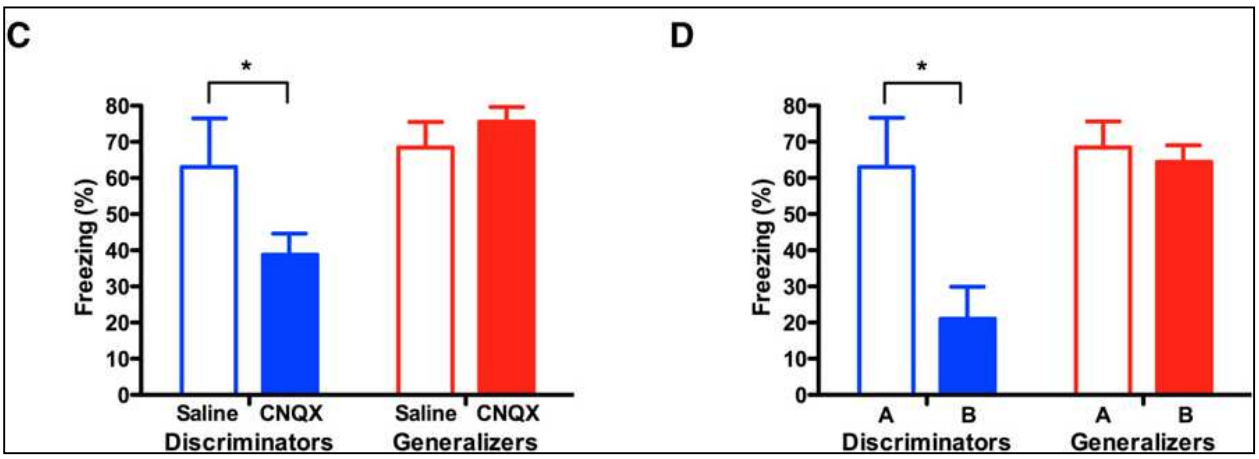

Figure 3: data from Alvarez et al. (2012). Animals that could discriminate context A from context B were impaired by hippocampal lesion but animals that could not discriminate contexts were not impaired as measured by percent of time spent freezing.

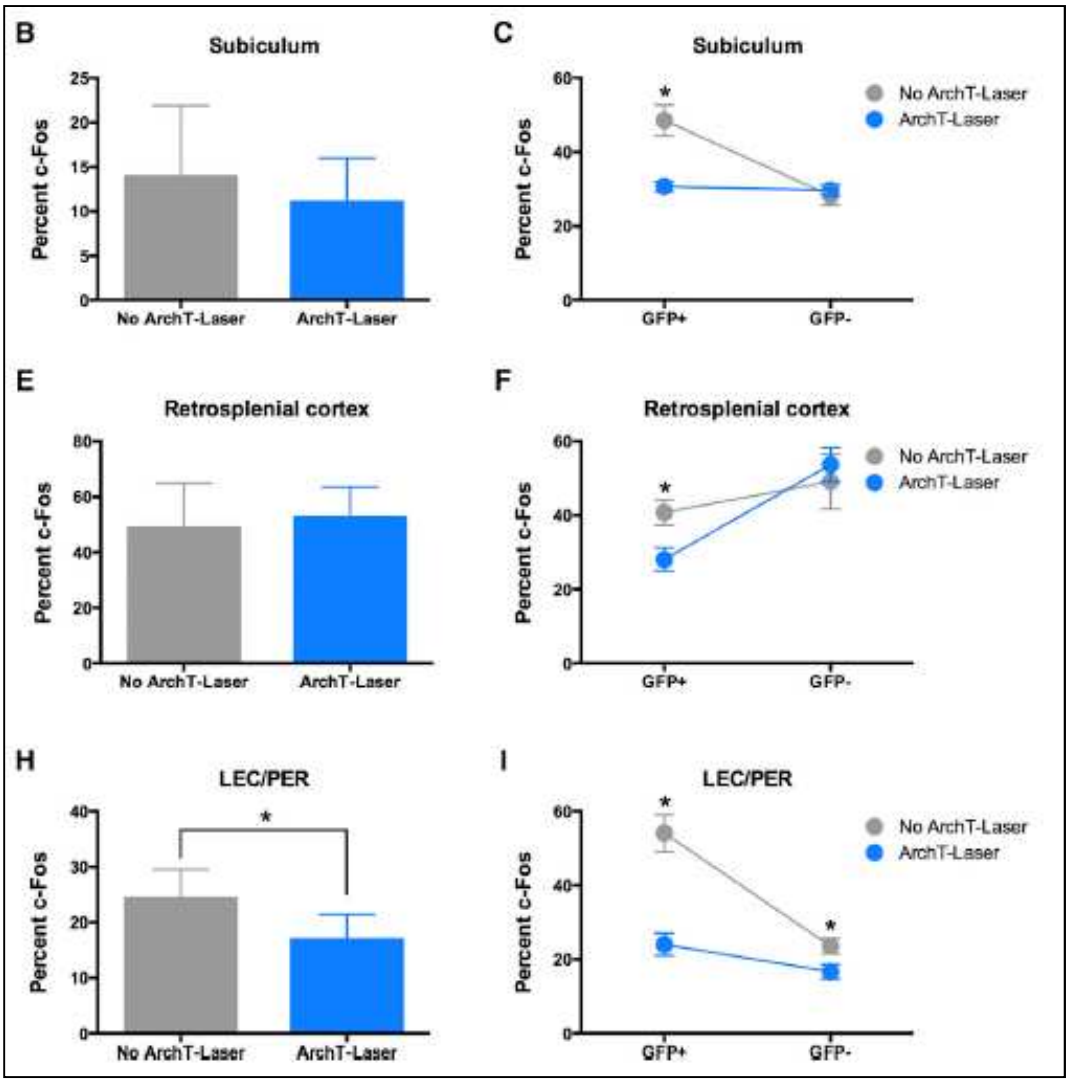

Figure 4: data from Tanaka et al., (2014). The left column shows that inactivating the hippocampus does not change the overall c-Fos expression in the subiculum or RSC but inactivating the hippocampus does decrease the overall c-Fos activity in the lateral EHC and PHC. The right column shows that inactivating the hippocampus during testing decreases the amount of cells that were active during learning (GFP+) in the subiculum, RSC, lateral EHC, and PHC.

Section 4

Extrahippocampal structures involved in memory

A further complication in the study of memory is the role of the other brain regions including the striatum and cortical structures depending on the training procedures used. Tasks eventually become more dependent on the striatum and this coincides with acquiring an

inflexible response-based strategy (Chang and Gold, 2003). Major interest in the involvement of the striatum in memory came after the triple dissociation made by McDonald and White (1993). They used three different tasks in a radial arm maze to test different forms of memory. The win-shift task required animals to choose a different arm every time without cues, thus requiring spatial memory of the arms the animal had already visited. The other two tasks used cues and did not require spatial memory. The conditioned cue preference (CCP) required each animal to enter either the lit arm or unlit arm. In the win-stay task the animal was required to enter each of the lit arms twice. Lesioning the hippocampus impaired the win-shift task, lesioning the lateral amygdala impaired the CCP, and lesioning the dorsal striatum impaired the win-stay task. Interestingly, hippocampal lesions improved performance on the win-stay task. Thus, subtle differences in task demands in the same environment can influence the brain regions involved.

Another dissociation that has been made between the hippocampus and striatum has been achieved by measuring place learning compared to response learning. On probe trials, the maze is rotated 180 degrees. If the animal turns to the correct place it is considered a place solution and if the animal turns to the correct direction prior to rotating the maze it is considered a response solution (Chang and Gold, 2003). These response solutions are inflexible. A rise in Ach activity coincides with the animal's transition from a place learner to a response learner. Similar findings have been found for CREB in the striatum (Columbo, Brightwell, and Countryman, 2003). Furthermore, intracaudate injections of glutamate speeds up the rate at which animals transition from place learning to response learning whereas intrahippocampal injections of glutamate causes animals to remain place learners (Packard, 1999). Furthermore, hippocampal lesions lead to inflexible response-based strategies (Ramos and Vaquero, 2000).

Besides a shift from increased hippocampal activity to increased striatal activity, numerous studies have found a role for cortical structures in memory. Although cortical

structures can support memory retrieval, memories stored in the cortex are believed to be more schematic or “gist-like” (Moscovitch et al., 2005). Patient work supports this idea. As mentioned previously, a retired amnestic taxi driver with hippocampal damage was able to maintain some spatial knowledge but was reliant on main roads (Maguire, Nannery, and Spiers, 2006) and was thus unable to maintain a detailed spatial map. Research from other groups supports this conclusion (Rosenbaum et al., 2000). Furthermore, human neuroimaging has shown that as time passes and memories become consolidated, there is a decrease in hippocampal-cortical activity and an increase in cortico-cortical activity (Takashima et al., 2009).

Major support for the concept of a memory schema stored outside of the hippocampus comes from the Morris group. In one study, rats learned a number of flavor-place associations (Tse et al., 2007). Rats were able to maintain memories when extensive hippocampal lesions were made 48 hours after learning. Hippocampal lesions did, however, prevent the rats from learning a new schema in a different environment suggesting impaired behavioral flexibility. The rats did, however, maintain their schema for their original environment even when tested months later suggesting that remote memory schemas are intact. Furthermore, lesioned animals were able to rapidly incorporate new paired associates within their existing schema suggesting new spatial learning can occur if it is incorporated into an existing schema. A similar experiment by the same group showed that incorporating new paired-associates into an existing schema increases immediate early gene activity in cortical areas including the prelimbic cortex, ACC, and RSC but not CA1 (Tse et al., 2011). Immediate early gene activity in cortical regions suggests that incorporating new information into an existing schema involves cortical activity. Data for the immediate early gene activity from Tse et al. (2009) is shown in *Figure 5*.

Memory involving a temporal discontiguity can also be consolidated and stored in extrahippocampal regions. Takehara, Kawahara, and Kirino (2003) used a trace conditioning

paradigm to show that hippocampal lesions impair recent but not remote trace memory. In contrast, lesions to either the mPFC or the cerebellum impair remote trace memories. Thus, the hippocampus is crucial shortly after trace learning but not at remote time periods whereas the cortical regions are crucial for remote trace memory retrieval. It is, however, unclear whether or not hippocampal time cells can be consolidated and stored in extrahippocampal brain regions. Future research would be useful in shedding light on this issue.

With time, spatial strategies are generalized into inflexible response-based strategies and this coincides with increased involvement of the striatum (Chang and Gold, 2003). Although hippocampal activity remains stable, the automatic response-based strategy overcomes the spatial strategy. Hippocampal lesions can also increase the use of a response-based strategy (McDonald and White, 1993). Similarly, without sufficient time for compensatory mechanisms, the hippocampus is always involved in retrieving recent and remote contextual fear memories (Goshen et al., 2011). Given sufficient time, the hippocampus is no longer required for remote contextual memory retrieval and this is associated with increased activity in the ACC. However, detailed contextual fear memories require the hippocampus, but not generalized contextual fear memories (Wiltgen et al., 2010). The hippocampus is required to recruit sufficient neural activity in cortical regions allowing for memory retrieval (Tanaka et al., 2014). Thus, the hippocampus is required to index detailed cortical representations, but not generalized representations. Furthermore, sufficient hippocampal activity that is not accompanied by sufficient striatal activity is required for flexible behavior, but not inflexible response-based strategies.

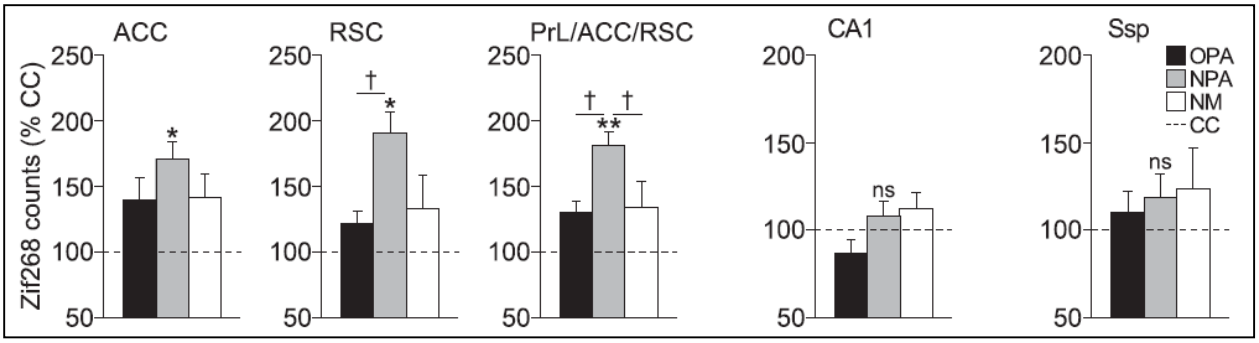

Figure 5: immediate early gene activity is increased in cortical regions but not CA1 by incorporating new paired-associates into an existing schema (Tse et al., 2011).

Section 5

Development of adult-born neurons

Two regions in the adult brain give rise to adult-born neurons, the subgranular zone and the subventricular zone. The subgranular zone gives rise to immature GCs that migrate to the DG (Altman and Das, 1965; Cameron et al., 1993). In contrast, cells from the subventricular zone migrate to the olfactory bulb in rodents (Altman, 1969). However, in humans cells in the subventricular zone don't migrate to the olfactory bulb (Bergmann et al., 2012), but instead migrate to the striatum in humans (Ernst et al., 2014). Due to the nature of the current review and the poor understanding of how striatal neurogenesis in humans may affect cognition, we will focus on adult-born GCs in the DG.

Adult-born GCs have an irregular shape, lack synapses, and do not have any clear axons or dendrites (Esposito et al., 2005). Despite the lack of synapses, new born cells are tonically activated by ambient GABA (Ge et al., 2006). At this time, GABA exerts an excitatory effect and promotes spine growth. GABA depolarizes new cells due to their high chloride concentration because of the NKCC1 transporter. NKCC1 is a Na(+)-K(+)-2Cl(-) cotransporter that increases intracellular chloride whereas the KCC2 is a K(+)-Cl(-) cotransporter that lowers internal chloride (Delpire, 2000). The NKCC1 transporter is crucial for normal development of GABA and

glutamate synapses (Ge et al., 2006). Immature cells are also different from mature cells in that they have T-type calcium channels that allow for calcium spikes and sodium spikes (Schmidt-Hieber, Jonas, and Bischofberger, 2004). New cells can receive GABAergic synaptic inputs as early as one week and they will have glutamatergic inputs by two weeks (Ge et al., 2006).

Early on adult-born GCs receive local GABAergic inputs from the subgranular zone, granule cell layer, and the hilus (Deshpande et al., 2013). However, by two weeks they receive projections from the molecular layer and long-range cholinergic projections from the medial septum and the nucleus of the diagonal band of Broca. The initial input from GABAergic cells may be due to the crucial role GABA plays in the early development of adult-born neurons (Ge et al., 2006). Mossy cells also provide excitatory input at this time. The spines of new cells receive input from multiple axon terminal buttons (Toni et al., 2007). However, as the GCs mature, the spines of adult-born GCs will eventually have a synapse with a single terminal button.

Axons of adult-born GCs form synapses with hilar interneurons and mossy cells in the DG as well as CA3 pyramidal cells spines (Toni et al., 2008). Axons of adult-born GCs initially have synapses on dendritic shafts before having synapses on dendritic spines. Like the spines of adult-born GCs, the axons also form synapses with spines that have pre-existing connections before eventually forming synapses with spines that have only one connection. The axons of new born cells reach CA3 pyramidal cells around two weeks but will continue to mature for several weeks (Gu et al., 2012; Zhao, Teng, Summers Jr., Ming, and Gage, 2006).

Input from the EHC and subiculum occurs around three weeks (Deshpande et al., 2013). Around the same time new born cells are also receiving input from the PHC and cholinergic cells in the septum (Vivar et al., 2012). The input from the EHC and PHC is initially very sparse but will increase as the GCs mature. GCs also receive a direct backprojection from CA3 at around three

weeks of age. Peak spine growth occurs during 3-4 weeks, but further modifications occur for months (Zhao et al., 2006). At three weeks, cell survival is dependent on activation of NMDA receptors (Tashiro, Sandler, Toni, Zhao, and Gage, 2006).

Cells at one month display enhanced plasticity that is dependent on NR2B-containing NMDA receptors (Ge et al., 2007). This enhanced plasticity will last until around six weeks. The induction threshold of LTP is decreased and the amplitude of LTP is increased during this time period. Cells at one month are more easily activated than mature cells (Marin-Burgin et al., 2012). A stimulus that recruits about 5% of mature cells will recruit about 30% of immature cells. Stimulating the medial PP causes immature cells to fire repeatedly, but mature cells fire at most one spike. This decreased spiking of mature cells is consistent with a recent and intriguing study used probabilistic methods to determine that the proportion of active GCs is comparable to the proportion of young GCs (Alme et al., 2010). They concluded that old GCs retire early. Furthermore, the decreased activity of mature cells is due to GABAergic inhibition because blocking GABA reduced the input strength required to activate mature but not immature cells (Marin-Burgin et al., 2012).

Prior work has shown that single spikes in the DG fail to activate CA3 pyramidal cells or interneurons, but trains of spikes are able to activate the CA3 cells (Henze, Wittner, and Buzsaki, 2002). Thus, mature GCs may not directly influence spiking activity in CA3. The decreased spiking in mature GCs, however, does not mean they don’t have a role in neural activity. Subthreshold potentials evoked by mossy fibers can induce synaptic plasticity in CA3 pyramidal cells (Brandalise and Gerber, 2014). The plasticity evoked by subthreshold potentials is important to note because the proportion of active GCs is comparable to the proportion of young GCs (Alme et al., 2010). While Alme et al. (2010) concluded that old GCs retire early, the capacity of GCs to produce synaptic plasticity questions this conclusion. Given that GCs initially

make synapses with CA3 cells with pre-existing synapses (Toni et al., 2007) and this occurs during the period of heightened plasticity (Ge et al., 2007), a combination of action potentials evoked by young GCs and subthreshold plasticity evoked by mature GCs may outweigh the effect of just action potentials by young GCs. Thus, the mature cells may not be retired, but they simply contribute differently than young GCs. It has already been shown at the behavioral level that young and old GCs make differential contributions to pattern separation and pattern completion, respectively (Nakashiba et al., 2012). Seeing as how different aged GCs make different contributions at the behavioral level, it would make sense that they also differ at the biological level.

One important caveat to note regarding the development of adult-born GCs is the differences between rodents and primates. Because much of the research regarding neurogenesis has been done with mice and rats, these findings may not hold true for humans and other primates. The maturation time for adult-born GCs in monkeys can take up to six months (Kohler, Williams, Stanton, Cameron, and Greenough, 2011) whereas maturation in rodents occurs much faster (Brown et al., 2003; Snyder et al., 2009). Given the enhanced plasticity and excitability of young GCs (Ge et al., 2007; Marin-Burgin et al., 2012), a prolonged maturation phase may have major implications for the role of adult-born GCs in primates including humans. Furthermore, recent work has shown that the proportion of adult-born GCs in humans is much greater than previously estimated (Spalding et al., 2013). Thus, humans have a much larger population of young and excitable GCs than previously believed.

Section 6

Neurogenesis and memory

Similar to the conflicting results for the role of the hippocampus in memory, studies involving the role of adult neurogenesis in memory have also produced conflicting results (Leuner et al., 2006; Ming and Song, 2011; Deng et al., 2010; Sahay et al., 2011; Aimone et al., 2011; Zhao et al., 2008). Just as some say that a role of the hippocampus is pattern separation (Deuker et al., 2014; Rolls, 2013; Yassa and Stark, 2011), a prominent theory posits that the role of adult neurogenesis is to enable pattern separation (Sahay et al., 2011). Pattern separation allows close spatial locations or similar contexts to be represented separately. In computational terms, this means taking correlated inputs and turning them into uncorrelated outputs. Thus, similar incoming sensory information can be computed and turned in to different behaviors depending on the context. The complement of pattern separation is pattern completion. Pattern completion allows a pattern of neural activity, and thus, a behavior to be rapidly completed with partial or noisy incoming sensory stimuli. Just as the level of detail contained in a memory is assumed to depend on hippocampal involvement (Wiltgen and Tanaka, 2013), similar ideas have been proposed for the role of neurogenesis in the detail of memories (Aimone et al., 2011; Lacar et al., 2014). Similar to the theories of pattern separation, Aimone et al. (2011) proposed that the role of neurogenesis is to increase the resolution of memories providing more detail and improving performance on memory tests.

6.1 Neurogenesis and pattern separation

Clelland et al. (2009) conducted a highly influential study demonstrating a role for neurogenesis in spatial pattern separation. They used both a touch screen task and a radial arm maze to show that neurogenesis was required to discriminate close spatial locations. Reducing

neurogenesis impaired performance when only one location separated the correct choice from the incorrect choice but not when more locations separated the correct choice from the incorrect choice. Similarly, increasing neurogenesis can improve pattern separation (Creer, Romber, Saksida, van Praag, and Bussey, 2010). It is also important to note that DG input is also important for pattern separation. Lesioning the EHC and PHC also impairs pattern separation on the touch screen task (Vivar et al., 2012). Thus, just as the DG input to the hippocampus forms a crucial neural circuit for detailed memory, so is the input from the EHC and PHC to the DG.

A recent study has challenged the findings of Clelland et al. (2009) by showing that decreasing neurogenesis does not impair pattern separation. However, this study used adjacent arms in the radial arm maze and thus making simple left-right discrimination would suffice for accurate performance (Groves et al., 2013). The radial arm maze task in Clelland et al. (2009) was likely more difficult and required a higher degree of pattern separation because in this task each open arm had a blocked arm on either side as can be seen in *Figure 6*.

Furthermore, a recent study has shown that it is specifically young adult-born GCs that are involved in pattern separation or distinguishing between similar contexts. Nakashiba et al. (2012) used a transgenic mouse line in which the output of older GCs was inhibited while leaving the output of younger GCs intact. Pattern separation for similar contexts was normal in transgenic mice but pattern completion was impaired. However, suppressing neurogenesis led to deficits in pattern separation. While a prominent computational model of neurogenesis has shown that increasing neurogenesis and the immature GC population should decrease pattern separation and instead allow for temporal pattern integration (Aimone, Wiles, and Gage, 2009), the biological data clearly shows evidence for their role of neurogenesis in pattern separation.

6.2 Neurogenesis and detailed memory

Similar discrepancies have been found regarding the role of neurogenesis in contextual fear conditioning. Suppressing neurogenesis has been shown to have no effect on contextual fear conditioning when the learned contexts are fairly dissimilar (Shors, Townsend, Zhao, Kozoroviskiy, and Gould, 2002), thus, not requiring high resolution memory or pattern separation. Similarly, increasing neurogenesis does not improve contextual fear memory when contexts are dissimilar (Sahay et al., 2011). However, when contexts are made more similar, suppressing neurogenesis impairs discriminations (Wu and Hen, 2014) and increasing neurogenesis improves contextual fear conditioning (Sahay et al., 2012). Furthermore, Wu and Hen (2014) dissociated that ablating neurogenesis in the dorsal DG impaired contextual discriminations when similar contexts were presented in the same order, but neurogenesis in both dorsal and ventral DG were required to discriminate the contexts when they were presented in a random order. Furthermore, a study with human participants found that increases in neurogenesis via exercise increased performance in an object recognition task that used similar objects as “lures” (Dery et al., 2013). Thus, detailed contextual memory and detailed object memory appears to benefit from adult neurogenesis in the DG.

Similar to studies using contextual fear conditioning, inconsistent results have been found for a role of neurogenesis in spatial learning including tests in the MWM. Saxe et al. (2006) found that suppressing neurogenesis did not impair performance in the MWM or the Y-maze. Interestingly, Kerr, Steuer, Pochtarev, and Swain (2010) found that blocking neurogenesis improved long term memory in the MWM and Saxe et al. (2007) found that suppressing neurogenesis improved performance in a working memory version of the radial arm maze. The findings in the working memory task, however, only held true for longer delay periods and

conditions that involved interference, but not when there was a high memory load with no interference.

Other work, however, have found that neurogenesis can support performance in the MWM. Garthe, Behr, and Kempermann (2009) found that reducing neurogenesis impaired performance on the MWM because the animals usually failed to develop a precise spatial strategy to find the platform compared to controls. Thus, neurogenesis is required for precise memories (Aimone et al., 2011). Animals with reduced neurogenesis also displayed more perseverance for the original platform location after the platform location was changed (Garthe et al., 2009). The impairments in reversal learning in animals with reduced neurogenesis suggest that neurogenesis also plays an important role in behavioral flexibility, just as the hippocampus plays a role in behavioral flexibility.

6.3 Neurogenesis and forgetting

While the evidence discussed above implicate adult neurogenesis in learning and memory, it is interesting to note that increasing neurogenesis after learning contextual fear conditioning induces forgetting (Akers et al., 2014). Furthermore, suppressing neurogenesis during infancy when the rate of neurogenesis is high mitigates infantile amnesia. Given the enhanced excitability of young adult-born GCs (Ge et al., 2007) and the role of neurogenesis in behavioral flexibility (Garthe et al, 2009), the fact that enhancing neurogenesis can induce forgetting may make sense. A more excitable population of cells after learning may bias information learned after the contextual fear training when there was a larger population highly excitable cells. The behavioral flexibility provided by neurogenesis may simply be “forgetting” old information and learning new information.

The fact that new GCs initially form synapses with cells that already have pre-existing connections (Toni et al., 2007; Toni et al., 2008) means that young adult-born GCs could obtain previously learned information from existing neural circuits. However, given the enhanced excitability of new GCs (Ge et al., 2007) and the stronger depolarization of CA3 cells by immature compared to mature GCs (Marin-Burgin et al., 2012), the new information learned after increasing neurogenesis could help form a stronger memory trace, and would thus, be easier to retrieve. Therefore, the forgetting observed by Akers et al. (2014) may simply reflect easier retrieval of memory traces when there was more neurogenesis compared to less neurogenesis. Thus, forgetting in some cases may simply reflect easier retrieval of memories formed when there were more excitable immature GCs. The easier retrieval of certain memories over others could psychologically manifest itself as behavioral flexibility and reversal learning.

Besides adult neurogenesis providing a pool of excitable GCs, neurogenesis in the DG also contributes to theta rhythms in the hippocampus (Nokia, Anderson, and Shors, 2012). Theta activity in the hippocampus is associated with faster learning (Berry and Thompson, 1978) and depriving animals of water increases theta activity and this is associated with faster learning (Berry and Swain, 1989). Chemotherapy disrupts neurogenesis, theta activity, and memory (Nokia et al., 2012). However, exercise can mitigate chemotherapies suppression of neurogenesis and improve memory (Winocur, Wojtowicz, Huang, and Tannock, 2014). Although Winocur et al. (2014) did not look at theta activity, it seems likely that theta was also recused by exercise. Thus, adult neurogenesis in the DG allows for hippocampal theta activity which in turn contributes to stronger memory. Thus, neurogenesis contributes to stronger memories via theta activity which means any memories formed when there was neurogenesis would be stronger and easier to retrieve.

6.4 Neurogenesis and temporal information

Adult neurogenesis in the DG is crucial for trace but not delay eye blink conditioning (Shors et al., 2001). Suppressing neurogenesis for two weeks but not for six days impairs trace eye blink conditioning. Furthermore, allowing a three week recovery period during which the number of young GCs in treated animals returns to that of controls rescues performance in trace eye blink conditioning because performance is no different than controls. Thus, similar to lesion studies with the hippocampus (Solomon et al., 1986; Moyer et al., 1990; Beylin et al., 2001), neurogenesis in the DG plays a crucial role in forming trace memories.

A recent study has found that neurogenesis also pertains to temporal aspects of memory. Rats were exposed to three separate contexts either on the same day, with two weeks of separation, or with greater than three weeks of separation. Because immature GCs exhibit a transient period of enhanced excitability (Ge et al., 2007), it was hypothesized that greater temporal separation would lead to distinct populations of GCs spiking to the different contexts and less temporal separation would lead to a similar population of GCs spiking to the different contexts. Indeed, place cells in the DG were more selective to a single context when exposures to different contexts were more than three weeks apart compared to both the two weeks a part group and the same day group (Rangel et al., 2014). Furthermore, suppressing neurogenesis greatly reduces context selectivity. Animals with suppressed neurogenesis in the two weeks a part condition had less context selectivity than the two week group with normal neurogenesis and had similar context selectivity with animals that had normal neurogenesis and were exposed to different contexts on the same day. Thus, the prediction from Aimone et al. (2009) that immature GCs allow for temporal pattern integration appears to be correct.

6.5 Neurogenesis and memory consolidation

It is interesting to note that neurogenesis can both contribute to detailed memory and memory consolidation. Kitamura et al. (2009) found that manipulating neurogenesis affects the rate of memory consolidation for contextual fear memories. Neurogenesis was suppressed in mice either genetically or with irradiation. Some mice also had hippocampal activity blocked with a sodium channel blocker and an AMPA receptor antagonist (TTX-infusion groups). The TTX-infusion groups were impaired on recent memory regardless of whether or not neurogenesis was suppressed. However, only the TTX-infusion group with neurogenesis suppressed showed impaired remote contextual fear memory. The impairment in the TTX-infusion group with neurogenesis suppressed was greater than when only neurogenesis was suppressed. Kitamura et al. (2009) also found that increasing neurogenesis via exercise increases the rate of memory consolidation. The TTX-infusion group was impaired on a seven day fear memory for the non-exercising non-irradiated group. However, the TTX-infusion group that exercised and did not have suppressed neurogenesis was not impaired on a seven day old contextual fear memory. Thus, the contextual fear memory was consolidated into extrahippocampal regions.

The findings of Kitamura et al. (2009) bring up an interesting question. How can neurogenesis contribute both to detailed memory and memory consolidation? Detailed memories depend on the hippocampus (Wiltgen et al., 2010) and neurogenesis in the DG (Wu and Hen, 2014). Schematic and generalized memories can be consolidated and stored in extrahippocampal brain regions (Wiltgen et al., 2010; Tse et al., 2007; Tse et al., 2011) and do not require neurogenesis (Shors et al., 2002; Wu and Hen, 2014). It could be that memory consolidation that occurs during high levels of neurogenesis leaves stronger memory traces containing more detail than memory traces formed when the rate of neurogenesis was lower.

Having a stronger memory trace would make retrieval easier. This may be why Akers et al. (2014) found that increasing neurogenesis induced forgetting. When there was a high rate of neurogenesis providing a large pool of young excitable cells (Ge et al., 2007), a strong memory trace was formed and this stronger memory trace was easier to retrieve than the weak trace formed during a lower rate of neurogenesis. However, just because a strong cortical trace can be hippocampal-independent (Kitamura et al., 2009), that does not mean an even more detailed memory could be retrieved with an intact hippocampus (Wiltgen et al., 2010).

An interesting finding by Kitamura et al. (2009) is that LTP maintenance in the DG was associated with longer consolidation periods. High frequency stimulation has been shown to induce long lasting maintenance of LTP in the DG (Abraham, Logan, Greenwood, and Dragunow, 2002). However, environmental enrichment which allows for new learning reverses the maintenance of LTP in the DG. Thus, new learning may induce memory consolidation by suppressing LTP in the DG. If this is true, increasing the levels of learning should increase the rates of memory consolidation. Manipulating the amount of new learning and examining the rate of memory consolidation could help support this proposition. If correct, this would have major implications on animal model studies examining memory consolidation. Most lab animals experience little learning, which leads to LTP maintenance in the DG which prevents memory consolidation.

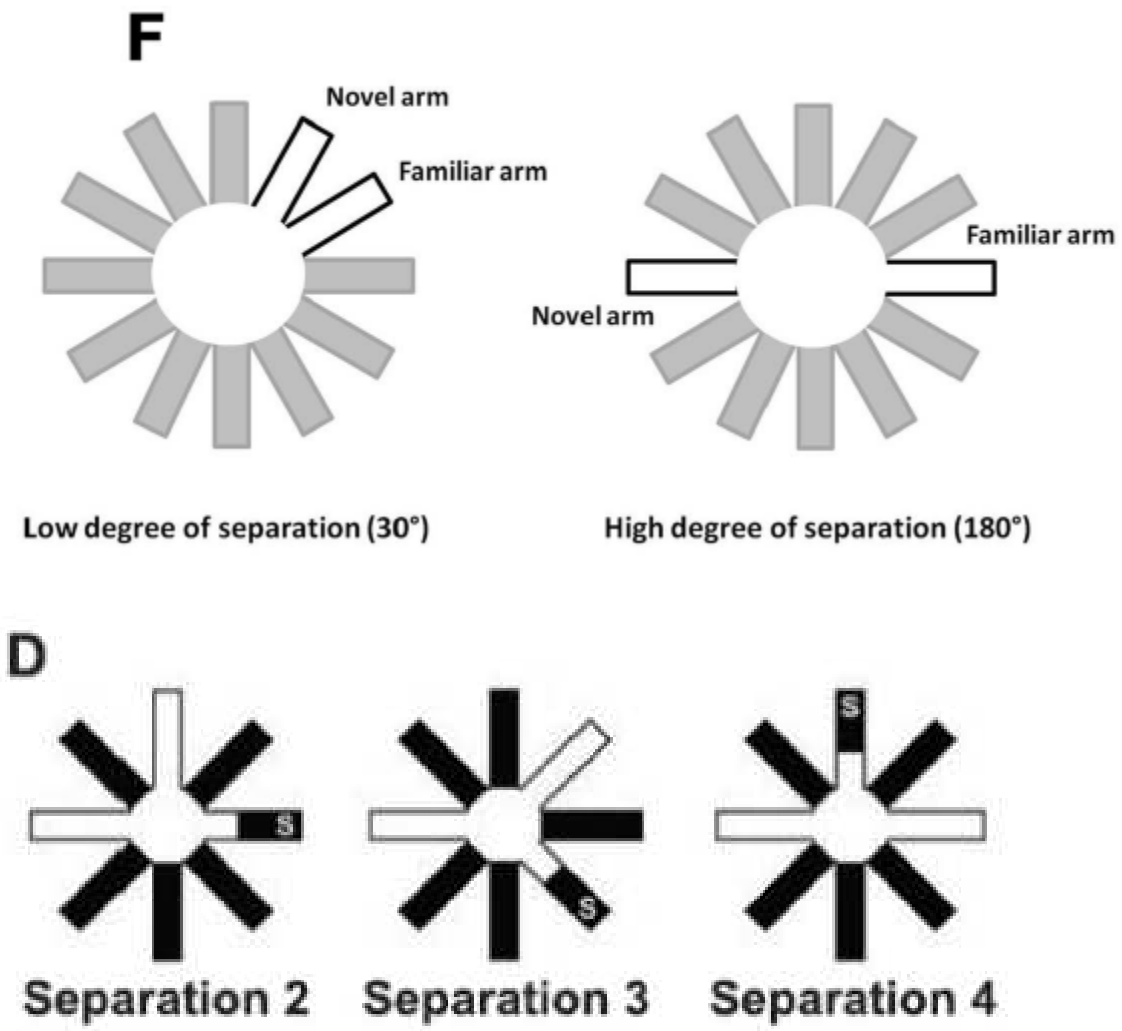

Figure 6: a comparison of radial arm mazes used to measure pattern separation taken from Groves et al. (2013) and Clelland et al. (2009), respectively.

Section 7

Merging research on the hippocampus with DG neurogenesis

Research regarding the hippocampus and neurogenesis in the DG should be merged into a more coherent field of study because they form a functional circuit that is crucial for highly detailed memories and flexible behavior. *Table 1* shows a list of similarities found in the literature regarding hippocampal lesions and manipulations of adult neurogenesis in the DG.

Despite the fact that the DG receives input from numerous brain regions, all of the output from the DG is sent to the hippocampus. Thus, all of the information processed in the DG must be sent to the hippocampus which is capable of indexing cortical regions that can store detailed memory representations and flexible behaviors. The hippocampus is crucial for detailed memories (Alvares et al., 2012; St-Laurent et al., 2014; McDonald and White, 1995; Winocur et al., 2010; Maguire et al., 2006) and so is adult neurogenesis in the DG (Wu and Hen, 2014; Sahay et al., 2012; Dery et al., 2013; Clelland et al., 2009). Based on the connectivity of the DG and the hippocampus as well as the crucial role young adult-born GCs in DG (Alme et al., 2010; Marin-Burgin et al., 2012), it should make sense that either hippocampal lesions or suppressing neurogenesis leads to impairments in detailed memory. Suppressing neurogenesis depletes the DG of young and excitable cells which send their output to the hippocampus. If the young and excitable cells cannot relay their message to the hippocampus then the hippocampus is receiving insufficient information which leads to an insufficient index. Furthermore, hippocampal lesions impair the region that the DG is sending its output to, thus, impairing the cortical index in a different part of the circuit. Similarly, lesioning the EHC and PHC input to the DG impaired detailed memories (Vivar et al., 2012). Thus, it is not sufficient to simply look at an isolated brain region. It is crucial to look at both the inputs and outputs of that brain region to fully understand the processing that is occurring in that brain region.

Aside from their common role in detailed memory, the hippocampus and DG neurogenesis are also involved in flexible behavior. Spatial schemas can be maintained in hippocampal lesioned animals but they are, however, inflexible (Winocur et al., 2005; Winocur et al., 2010). Alterations made to the environment impair performance and, thus, flexible behavior is impaired. Spatial schemas after hippocampal lesions are only intact if testing in the environment is done in the same room as learning the schema but not when testing is done in a

different room (Tse et al., 2007). Similarly, suppressing neurogenesis impairs reversal learning in the MWM (Garthe et al., 2009). Thus, flexible behavior is impaired either by lesioning the hippocampus or by suppressing neurogenesis in the DG, both of which are involved in indexing traces stored in the cortex.

The unique connections of immature GCs may play a role in their role in flexible behavior. Immature GCs form synapses with cells that already have pre-existing synapses (Toni et al., 2007; Toni et al, 2008). This means they can both send information to and receive information from cells that are already involved in memory circuits. Given the enhanced plasticity and excitability of immature GCs (Ge et al., 2007; Marin-Burgin et al., 2010), the immature GCs may bias new sensory information which is sent to the hippocampus. This new sensory information could then be indexed by the hippocampus to form a stronger cortical trace. Alternatively, the young and excitable GCs could allow for the hippocampus to index different behaviors based on new and relevant sensory information. The manifestation of new learned behaviors in a similar context would be observed behavioral flexibility.

Hippocampal lesions	**DG neurogenesis manipulations**
Contextual fear/discrimination memory	*Contextual fear/discrimination memory*
Hippocampal lesions impair contextual fear memory (Kim and Fanselow, 1992).	Ablating neurogenesis does not impair contextual fear memory (Shors et al., 2002).
Hippocampal lesions do not impair contextual fear memory (Sutherland et al., 2008).	Increasing neurogenesis improves contextual fear memory for similar contexts but not dissimilar contexts (Sahay et al., 2012).
Hippocampal lesions impair detailed contextual fear memory, but not generalized contextual fear memory (Wiltgen et al., 2010).	Ablating neurogenesis impair context discrimination for similar contexts (Wu and Hen, 2014)

Spatial memory	*Spatial memory*
Generalized or schematic spatial memories can remain intact after hippocampal lesion (Tse et al., 2007; Maguire et al., 2006; Winocur et al., 2005).	Suppressing neurogenesis does not impair performance in MWM (Saxe et al., 2006) and can even improve performance (Kerr et al., 2010).
Memory in the MWM is always impaired by hippocampal lesions (Clark et al., 2005; Martin et al., 2005; Winocur et al., 2013).	Precise spatial strategies in the MWM are impaired by ablating neurogenesis in the DG (Garthe et al., 2009).
Hippocampal lesions impair flexible spatial behavior (Ramos and Vaquero, 2000).	Ablating neurogenesis in the DG impairs flexible spatial behavior (Garthe et al., 2009).
Temporal discontiguity	*Temporal discontiguity*
Lesioning the hippocampus impairs trace but not delay eye blink conditioning (Solomon et al., 1986; Moyer et al., 1990).	Suppressing neurogenesis impairs trace but not delay eye blink conditioning (Shors et al., 2001).

Table 1: a comparison of the impact that hippocampal lesions and manipulations of neurogenesis in the DG on memory. Both hippocampal lesions and ablating neurogenesis impairs detailed, but more generalized contextual fear memories. Hippocampal lesions impair detailed but not generalized spatial memories; Ablating neurogenesis impairs precise spatial strategies in the MWM. Hippocampal lesions and ablating neurogenesis impairs trace but not delay eye blink conditioning.

Section 8

Questions and future directions

- Despite the knowledge that mature GCs are relatively silent (Alme et al., 2010; Marin-Burgin et al., 2012), recent research has shown that subthreshold stimulation of CA3 and the DG can induce synaptic plasticity at CA3 synapses (Brandalise and Gerber,

2014). Thus, despite their limited ability to fire action potentials, mature GCs may be able to make a functional contribution to hippocampal function. What, if any, functional contribution could these mature but “silent” cells have in hippocampal function? Immature GCs initially form synapses with spines and terminal buttons that already have existing synapses (Toni et al., 2007; Toni et al., 2008) and this continues while the immature GCs display enhanced plasticity (Ge et al., 2007). It may be that the combination of the mature and immature GCs may bias information processing more than simply the immature GCs.

- Studies with trace conditioning (Solomon et al., 1986; Moyer et al., 1990; Beylin et al. 2001) and time cells (McDonald et al., 2011) provide evidence that the hippocampus is involved in processing temporal information. Evidence also shows that hippocampal lesions impair recent but not remote trace conditioning (Ryou et al., 2001), suggesting that these memories can be consolidated and stored in extrahippocampal structures. The mPFC and cerebellum are both necessary for the retrieval of remote consolidated trace memories, but not the hippocampus (Takehara et al., 2003). It is, however, unclear whether or not the information contained in hippocampal time cells can be consolidated and become hippocampal-independent. Future studies could examine this possibility and determine if theses consolidated memories containing temporal information are more schematic than memories retrieved with hippocampal recruitment.
- Increased rates of neurogenesis have been shown to increase the rate of memory consolidation and this coincides with a decreased maintenance of LTP in the DG (Kitamura et al., 2009). Humans have an incredibly high rate of adult neurogenesis compared to rodents (Spalding et al., 2013), but memory consolidation occurs slower in humans compared to rodents (Scoville and Milner, 1957; Kim and Fanselow, 1992). Why

do humans have more neurogenesis but an increased consolidation period? Environmental enrichments which provide new learning decrease the maintenance of LTP in the DG (Abraham, Logan, Greenwood, and Dragunow, 2002). Thus, new learning could increase the rate of memory consolidation via a decreased level of LTP maintenance in the DG. Manipulating the levels of new learning in animal models and then assessing the consolidation period as well as LTP maintenance in the DG could help confirm this possibility. However, the rate of maturation of adult-born GCs is much different in primates compared to rodents (Kohler et al., 2011). Thus, it may be that adult-born human GCs have an increased period of excitability which is constantly recruiting cells in the DG which activates the hippocampus which reinstates hippocampal dependency (Alvarez et al., 2012; Debiec et al., 2002).

- Immature GCs appear to be more active than mature GCs (Ge et al., 2007; Marin-Burgin et al., 2012). It was recently discovered that humans have a much larger population of adult-born GCs than previously expected (Spalding et al., 2013). How does this large population of GCs contribute to learning and memory in humans? Neurogenesis plays a crucial role in flexible behavior (Garthe et al., 2009). Humans display an incredible amount of behavioral flexibility as shown by the ratchet effect which allows the updating of existing technology (Tennie, Call, and Tomasello, 2009). Thus, the high levels of behavioral flexibility seen in humans may be due to the high rates of neurogenesis. Therefore, it is not simply the cortex that allows for complex human behaviors (Rakic, 2009), but also adult neurogenesis in the DG.

References

Abraham, W.C., Logan, B., Greenwood, J.M., and Dragunow, M. (2002). Induction and experience-dependent consolidation of stable long-term potentiation lasting months in the hippocampus. *The Journal of Neuroscience. 22(21),* 9626-9634.

Acsady, L., Kamondi, A., Sik, A., Freund, T., and Buzsaki, G. (1998). GABAergic cells are the major postsynaptic targets of mossy fibers in the rat hippocampus. *The Journal of Neuroscience. 18(9),* 3386-3403.

Aimone, J.B., Deng, W., and Gage, F.H. (2011). Resolving new memories: a critical look at the dentate gyrus, adult neurogenesis, and pattern separation. *Neuron. 70,* 589-596.

Aimone, J.B., Wiles, J., and Gage, F.H. (2009). Computational influence of adult neurogenesis on memory encoding. *Neuron. 61,* 187-202.

Akers, K.G., Martinez-Canabal, A., Restivo, L., Yiu, A.P., De Cristofaro, A., Hsiang, H-L., Wheeler, A.L., Guskjolen, A., Niibori, Y., Shoji, H., Ohira, K., Richards, B.A., Miyakawa, T., Josselyn, S.A., and Frankland, P.W. (2014). Hippocampal neurogenesis regulates forgetting during adulthood and infancy. *Science. 344,* 598-602.

Alme, C.B., Buzzetti, R.A., Marrone, D.F., Leutgeb, J.K., Chawla, M.K., Schaner, M.J., Bohanick, J.D., Khoboko, T., Leutgeb, S., Moser, E.I., Moser, M.-B., McNaughton, B.L., and Barnes, C.A. (2010). Hippocampal granule cells opt for early retirement. *Hippocampus. 20,* 1109-1123.

Altman, J. (1969). Autoradiographic and histological studies of postnatal neurogenesis. IV. Cell proliferation and migration in the anterior forebrain, with special reference to persisting neurogenesis in the olfactory bulb. *Journal of Comparative Neurology. 137(4),* 433-457.

Altman, J. and Das, (1965). Post-natal origin of microneurones in the rat brain. *Nature. 207,* 953-956.

Alvares Lde, O., Einarsson, E.O., Santana, F., Crestani, A.P., Haubrich, J., Cassini, L.F., Nader, K., and Quillfeldt, J.A. (2012). Periodically reactivated context memory retains its precision and dependence on the hippocampus. *Hippocampus. 22,* 1092-1095.

Amaral, D.G. and Witter, M.P. (1989). The three-dimensional organization of the hippocampal formation: a review of anatomical data. *Neuroscience. 31(3),* 571-591.

Amaral, D.G. (1978). A Golgi study of cell types in the hilar region of the hippocampus in the rat. *Journal of Comparative Neurology. 182,* 851-914.

Arszovszki, A., Borhegyi, Z., and Klausberger, T. (2014). Three axonal projection routes of individual pyramidal cells in the ventral CA1 hippocampus. *Frontiers in Neuroanatomy.* doi: 10.3389/fnana.2014.00053.

Bergmann, O., Liebel, J., Bernard, S., Alkass, K., Yeung, M.S.Y., Steier, P., Kutschera, W., Johnson, L., Landen, M., Druid, H., Spalding, K.L., Frisen, J. (2012). The age of olfactory bulb neurons in humans. *Neuron. 74,* 634-639.

Berry S.D. and Swain, R.A. (1989). Water deprivation optimizes hippocampal activity and facilitates nictitating membrane conditioning. *Behavioral Neuroscience. 103(1),* 71-76.

Berry, S.D. and Thompson, R.F. (1978). Prediction of learning rate from hippocampal electroencephalogram. *Science. 200, 1298-1300.*

Beylin, A.V., Gandhi, C.C., Wood, G.E., Talk, A.C., Matzel, L.D., and Shors, T.J. (2001). The role of the hippocampus in trace conditioning: temporal discontinuity or task difficulty? *Neurobiology of Learning and Memory. 76,* 447-461.

Bolhuis, J.J., Stewart, C.A., and Forrest, E.M. (1994). Retrograde amnesia and memory reactivation in rats with ibotenate lesions to the hippocampus or Subiculum. *The Quarterly Journal of Experimental Psychology. 47b(2),* 129-150.

Bonifazi, P., Goldin, M., Picardo, M.A., Jorquera, I., Cattani, A., Bianconi, G., Represa, A., Ben-Ari, Y., and Cossart, R. (2009). GABAergic hub neurons orchestrate synchrony in developing hippocampal networks. *Science. 326,* 1419-1424.

Brandalise, F. and Gerber, U. (2014). Mossy fiber-evoked subthreshold responses induce timing-dependent plasticity at hippocampal CA3 recurrent synapses. *Proceedings for the National Academy of Sciences. 111(11),* 4303-4308.

Brown, J.P., Couilard-Despres, S., Cooper-Kuhn, C.M., Winkler, J., Aigner, L., and Kuhn, H.G. (2003). Transient expression of doublecortin during adult neurogenesis. *Journal of Comparative Neurology. 467(1),* 1-10.

Bullmore, E. and Sporns, O. (2009). Complex brain networks: graph theoretical analysis of structural and functional systems. *Nature Reviews Neuroscience. 10,* 186-198.

Buzsaki, G., (1996). The hippocampo-neocortical dialogue. *Cerebral Cortex. 6,* 81-92.

Cameron, H.A., Woolley, C.S., McEwen, B.S., and Gould, E. (1993). Differentiation of newly born neurons and glia in the dentate gyrus of the adult rat. *Neuroscience. 56(2),* 337-344.

Cenquizca, L.A. and Swanson, L.W. (2006). Analysis of direct hippocampal cortical field CA1 axonal projections to diencephalon in the rat. *The Journal of Comparative Neurology. 497,* 101-114.

Chang, Q. and Gold, P.E. (2003). Switching memory systems during learning: changes in patterns of brain acetylcholine release in the hippocampus and striatum of rats. *The Journal of Neuroscience. 23(7),* 3001-3005.

Ciftci, K. (2011). Minimum spanning tree reflects the alterations of the default mode network during Alzheimer's disease. *Annals of Biomedical Engineering. 29(5),* 1493-1504.

Clark, R.E., Broadbent, Squire, L.R. (2005). Impaired remote spatial memory after hippocampal lesions despite extensive training beginning early in life. *Hippocampus. 15,* 340-346.

Clelland, C.D., Choi, M., Romberg, C., Clemenson Jr., G.D., Fragniere, A., Tyer, P., Jessberger, S., Saksida, L.M., Barker, R.A., Gage, F.H., and Bussey, T.J. (2009). A functional role for adult hippocampal neurogenesis in spatial pattern separation. *Science. 325,* 210-213.

Colon-Cesario, M., Wang, J., Ramos, X., Garcia, H.G., Davila, J.J., Laguna, J., Rosado, C., and Pena de Ortiz, S. (2006). An inhibitor of DNA recombination blocks memory consolidation, but not reconsolidation, in context fear conditioning. *The Journal of Neuroscience. 26(20),* 5524-5533.

Columbo, P.J., Brightwell, J.J., and Countryman, R.A. (2003). Cognitive strategy-specific increases in phosphorylated cAMP response element-binding protein and c-Fos in the hippocampus and dorsal striatum. *The Journal of neuroscience. 23(8),* 3547-3554.

Cowansage, K.K., Shuman, T., Dillingham, B.C., Chang, A., Golshani, P., Mayford, M. (2014). Direct reactivation of a coherent neocortical memory of context. *Neuron. 84,* 432-441.

Creer, D.J., Romberg, C., Saksida, L.M., van Praag, H., and Bussey, T.J. (2010). Running enhances spatial pattern separation in mice. *Proceedings for the National Academy of Sciences. 107(5),* 2367-2372.

Debiec, J., LeDoux, J.E., and Nader, K. (2002). Cellular and systems reconsolidation in the hippocampus. *Neuron. 36,* 527-538.

Delpire, E. (2000). Cation-chloride cotransporters in neuronal communication. *News Physiological Science. 15, 309-312.*

Deng, W., Aimone, J.B., and Gage, F.H. (2010). New neurons and new memories: how does adult hippocampal neurogenesis affect learning and memory? *Nature Reviews Neuroscience. 11,* 339-350.

Dery, N., Pilgrim, M., Gibala, M., Gillen, J., Wojtowicz, J.M., MacQueen, G., and Becker, S. (2013). Adult hippocampal neurogenesis reduces memory interference in humans: opposing effects of aerobic exercise and depression. *Frontiers in Neuroscience. 7,* doi: 10.3389/fnins.2013.00066.

Deshpande, A., Bergami, M., Ghanem, A., Conzelmann, K., Lepier, A., Gotz, M., and Berninger, B. (2013). Retrograde monosynaptic tracing reveals the temporal evolution of inputs onto new neurons in the adult dentate gyrus and olfactory bulb. *Proceedings for the National Academy of Sciences.* E1152-E1161.

Deuker, L., Doeller, C.F., Fell, J., and Axmacher, N. (2014). Human neuroimaging studies on the hippocampal CA3 region – integrating evidence for pattern separation and completion. *Frontiers in Cellular Neuroscience.* doi: 10.3389/fncel.2014.00064.

Ernst, A., Alkass, K., Bernard, S., Salehpour, M., Perl, S., Tisdale, J., Possnert, G., Druid, H., and Fisen, J. (2014). Neurogenesis in the striatum of the adult human brain. *Cell.156,* 1072-1083.

Esposito, M.S., Piatti, V.C., Laplagne, D.A., Morgenstern, N.A., Ferrari, C.C., Pitossi, F.J., and Schinder, A.F. (2005). Neuronal differentiation in the adult hippocampus recapitulates embryonic development. *The Journal of Neuroscience. 25(44),* 10074-10086.

Fell, J. and Axmacher, N. (2011). The role of phase synchronization in memory processes. *Nature Reviews Neuroscience. 12,* 105-118.

Kim, J.J. and Fanselow, M.S. (1992). Modality-specific retrograde amnesia of fear. *Science. 256,* 675-677.

Garthe, A., Behr, J., and Kempermann, G. (2009). Adult-generated hippocampal neurons allow the flexible use of spatially precise learning strategies. *PLoS ONE. 4(5),* e5464. Doi:10.137/journal.pone.0005464.

Ge, S., Goh, E.L.K., Sailor, K.A., kitabatake, Y., Ming, G., and Song, H. (2006). GABA regulates synaptic integration of newly generated neurons in the adult brain. *Nature. 249,* 589-593.

Ge, S., Yang, C., Hsu, K., Ming, G., and Song, H. (2007). A critical period for enhanced synaptic plasticity in newly generated neurons of the adult brain. *Neuron. 54,* 559-566.

Goshen, I., Brodsky, M., Prakash, R., Wallace, J., Gradinaru, V., Ramakrishnan, C., and Deisseroth, K. (2011). Dynamics of retrieval strategies for remote memories. *Cell. 147,* 678-689.

Groves, J.O., Leslie, I., Huang, G.-J., McHugh, S.B., Taylor, A., Mott, R., Munafo, M., Bannerman, D.M., and Flint, J. (2013). Ablating adult neurogenesis in the rat has no effect on spatial processing: evidence from a novel pharmacogenetic model. *PLoS Genetics. 9(9),* e1003718. doi: 10.1371/journal.pgen.1003718.

Gu, Y., Arruda-Carvalho, M., Wang, J., Janoschka, S.R., Josselyn, S.A., Frankland, P.W. and Ge, S. (2012). Optical controlling reveals time-dependent roles for adult-born dentate granule cells. *Nature Neuroscience. 15(12),* 1700-1706.

Henze, D.A., Wittner, L., and Buzsaki, G. (2002). Single granule cells reliably discharge targets in the hippocampal CA3 network *in vivo*. *Nature. 5(8),* 790-795.

Hjorth-Simonsen, A. (1973). Some intrinsic connections of the hippocampus in the rat: an experimental analysis. *Journal of Comparative Neurology. 147,* 145-161.

Hupbach, A., Hardt, O., Gomez, R., and Nadel, L. (2008). The dynamics of memory: context-dependent updating. *Learning and Memory. 15,* 574-579.

Kerr, A.L., Steuer, E.L., Pochtarev, and Swain, R.A. (2010). Angiogenesis but not neurogenesis is critical for normal learning and memory acquisition. *Neuroscience. 171,* 214-226.

Kim, J.J., Clark, R.E., and Thompson, R.F. (1995). Hippocampectomy impairs the memory of recently, but not remotely, acquired trace eyeblink conditioned responses. *Behavioral Neuroscience. 109(2),* 195-203.

Kishi, T., Tsumori, T., Yokota, S., and Yasui, Y. (2006). Topographical projection form the hippocampal formation to the amygdala: a combined anterograde and retrograde tracing study in the rat. *The Journal of Comparative Neurology. 496,* 349-368.

Kiss, J., Csaki, A., Bokor, H., Shanabough, M., and Leranth, C. (2000). The supramammillo-hippocampal and supramammillo-septal glutamatergic/asparatergic projections in the rat: a combined [^{3}H]D-aspartate autoradiographic and immunohistochemical study. *Neuroscience. 97(4),* 657-669.

Kitamura, T., Okubo-Suzuki, R., Takashima, N., Murayama, A., Hino, T., Nishizono, H., Kida, S., and Inokuchi, K. (2012). Hippocampal function is not required for the precision of remote place memory. *Molecular Brain. 5(5).*

Kitamura, T., Saitoh, Y., Takashima, N., Muryama, A., Niibori, Y., Ageta, H., Sekiguchi, M., Sugiyama, H., and Inokuchi, K., (2009). Adult neurogenesis modulates the hippocampus-dependent period of associative fear memory. *Cell. 139,* 814-827.

Kohler, S.J., Williams, N.I., Stanton, G.B., Cameron, J.L., Greenough, W.T. (2011). Maturation time of new granule cells in the dentate gyrus of adult macaque monkeys exceeds six months. *Proceedings for the National Academy of Sciences. 108(25),* 10326-10331.

Lacar, B., Parylak, S.L., Vadodaria, K.C., Sarkar, A., and Gage, F.H. (2014). Increasing the resolution of the adult neurogenesis picture. *F1000 Prime Reports. 6(8),* doi: 10.12703/P6-8.

Lehmann, H., Lacanilao, S., and Sutherland, R.J. (2007). Complete or partial hippocampal damage produces equivalent retrograde amnesia for remote contextual fear memories. *European Journal of Neuroscience. 25,* 1278-1286.

Lehmann, H., Sparks, F.T., Spanswick, S.C., Hadikin, C., McDonald, R.J., and Sutherland, R.J. (2009). Making context memories independent of the hippocampus. *Learning and memory. 16(7),* 417-420.

Leuner, B., Gould, E., and Shors, T.J. (2006). Is there a link between adult neurogenesis and learning? *Hippocampus. 16,* 216-224.

Maguire, E.A., Nannery, R., and Spiers, H.J. (2006). Navigation around London by a taxi driver with bilateral hippocampal lesions. *Brain. 129,* 2894-2907.

Marin-Burgin, A., Mongiat, L.A., Pardi, M.B., Schinder, A.F. (2012). Unique processing during a period of high excitation/inhibition balance in adult-born neurons. *Science. 335,* 1238-1242.

Martin, S.J., de Hoz, L., and Morris, R.G.M. (2005). Retrograde amnesia: neither partial nor complete hippocampal lesions in rats result in preferential sparing of remoter spatial memory, even after reminding. *Neuropsychologia. 43,* 609-624.

MacDonald, C.J., Lepage, K.Q., Eden, U.T., and Eichenbaum, H. (2011). Hippocampal "time cells" bridge the gap in memory for discontiguous events. *Neuron. 71,* 737-749.

McClelland, J.L., McNaughton, B.L., and O'Reily R.C. (1995). Why there are complementary learning systems in the hippocampus and neo-cortex: insights from the successes and failures of connectionist models of learning and memory. *Psychological Review. 102(3),* 419-457.

McDonald, R.J. and White, N.M. (1993). A triple dissociation of memory systems: hippocampus, amygdala, and dorsal striatum. *Behavioral Neuroscience. 107(1),* 3-22.

McDonald, R.J. and White, N.M. (1994). Parallel information processing in the water maze: evidence for independent memory systems involving dorsal striatum and hippocampus. *Behavioral Neural Biology. 61(3),* 260-270.

McDonald, R.J. and White, N.M. (1995). Hippocampal and nonhippocampal contributions to place learning in rats. *Behavioral Neuroscience. 109(4),* 579-593.

Ming, G.-L. and Song, H. (2011). Adult neurogenesis in the mammalian brain: significant answers and significant questions. *Neuron. 70,* 687-702.

Miyashita, T. and Rockland, K.S. (2007). GABAergic projections from the hippocampus to the retrosplenial cortex in the rat. *European Journal of Neuroscience. 26,* 1193-1204.

Moscovitch, M., Rosenbaum, R.S., Gilboa, A., Addis, D.R., Westmacott, R., Grady, C., McAndrews, M.P., Levine, B., Black, S., Winocur, and Nadel, L. (2005). Functional neuroanatomy of remote episodic, semantic and spatial memory: a unified account based on multiple trace theory.

Moses, S.N., Winocur, G., Ryan, J.D., and Moscovitch, M. (2007). Environmental complexity affects contextual fear conditioning following hippocampal lesions in rats. *Hippocampus. 17,* 333-337.

Moyer, Jr., J.R., Deyo, R.A., and Disterhoft, J.F. (1990). Hippocampetomy disrupts trace eye-blink conditioning in rabbits. *Behavioral Neuroscience. 104(2),* 243-252.

Muller, R.U. and Kubie, J.L. (1987). The effects of changes in the environment on the spatial firing of hippocampal complex-spike cells. *Journal of Neuroscience. 7(7),* 1951-1968.

Naber, P.A., Witter, M.P., and Lopes da Silva, F.H. (1999). Perirhinal cortex input to the hippocampus in the rat: evidence for parallel pathways, both direct and indirect. A combined physiological and anatomical study. *European Journal of Neuroscience. 11,* 4119-4133.

Nadel, L. and Moscovitch, M. (1997). Memory consolidation, retrograde amnesia and the hippocampal complex. *Current Opinion in Neurobiology. 7,* 217-227.

Nakashiba, T., Cushman, J.D., Pelkey, K.A., Renaudineau, S., Buhl, D.L., McHugh, T.J., Barrera, V.R., Chittajallu, R., Iwamoto, K.S., McBain, C.J., Fanselow, M.S., and Tonegawa, S. (2012). Young dentate granule cells mediate pattern separation, whereas old granule cells facilitate pattern completion. *Cell. 149,* 188-201.

Nokia, M.S., Anderson, M.L., and Shors, T.J. (2012). Chemotherapy disrupts learning, neurogenesis and theta activity in the adult brain. *European Journal of Neuroscience. 36,* 3521-3530.

Packard, M.G. (1999). Glutamate infused posttraining into the hippocampus or caudate-putamen differentially strengthens place and response learning. *Proceedings for the National Academy of Sciences. 96(22),* 12881-12886.

Rakic, P. (2009). Evolution of the neocortex: a perspective from developmental biology. *Nature Reviews Neuroscience. 10,* 724-735.

Ramos, J.M.J. and Vaquero, J.M.M. (2000). The hippocampus and flexible spatial knowledge in rats. *Journal of Physiology and Biochemistry. 56(4),* 313-320.

Rangel, L.M., Alexander, A.S., Aimone, J.B., Wiles, J.B., Gage, F.H., Chiba, A.A., and Quinn, L.K. (2014). Temporally selective contextual encoding in the dentate gyrus of the hippocampus. *Nature Communications. 5(3181),* DOI: 10.1038/ncomms4181.

Reagh, Z.M. and Yassa, M.A. (2014). Repetition strengthens target recognition but impairs similar lure discrimination: evidence for trace competition. *Learning and Memory. 21,* 342-346.

Rockland, K.S. and van Hoesen, G.W. (1999). Some temporal and parietal cortical connections converge in CA1 of the primate hippocampus. *Cerebral Cortex. 9,* 232-237.

Rolls, E.T. (2013). The mechanisms for pattern completion and pattern separation in the hippocampus. *Frontiers in Systems Neuroscience.* doi: 10.3389/fnsys.2013.00074.

Rosenbaum, R.S., Priselac, S., Kohler, S., Black, S.E., Gao, f., Nadel, L., and Moscovitch, M. (2000). Remote spatial memory in an amnestic person with extensive bilateral hippocampal lesions. *Nature Neuroscience. 3,* 1044-1048.

Ryou, J.-W., Cho, S.-Y., land Kim, H.-T. (2001). Acquisition of hippocampal-dependent trace conditioning. *Neurobiology of Learning and Memory. 75,* 121-127.

Saxe, M.D., Battaglia, F., Wang, J., Malleret, G., David, D.J., Monckton, J.E., Garcia, A.D.R., Sofroniew, M.V., Kandel, E.R., Santarelli, L., Hen, R., Drew, M.R. (2006). Ablation of hippocampal neurogenesis impairs contextual fear conditioning and synaptic plasticity in the dentate gyrus. *Proceedings for the National Academy of Sciences. 103(46),* 17501-17506.

Saxe, M.D., Malleret, G., Vronskaya, S., Mendez, I., Garcia, A.D., Sofroneiw, M.V., Kandel, E.R., and Hen, R. (2007). Paradoxical influence on hippocampal neurogenesis on working memory. *Proceedings for the National Academy of Sciences. 104(11),* 4642-4646.

Sahay, A., Scobie, K.N., Hill, A.S., O'Carroll, C.M., Kheirbek, M.A., Burghardt, N.S., Fenton, A.A., Dranovstky, A., and Hen, R. (2011). Increasing adult hippocampal neurogenesis is sufficient to improve pattern separation. *Nature. 472,* 466-470.

Sahay, A., Wilson, D.A., and Hen, R. (2011). Pattern separation: a common function for new neurons in hippocampus and olfactory bulb. *Neuron. 70,* 582-588.

Scharfman, H.E. (Eds). Amaral, D., Scharfman, H.E., and Lavenex, P. (2007). The dentate gyrus: fundamental neuroanatomical organization (dentate gyrus for dummies). *Progress in Brain Research. 163,* 3-22.

Scharfman, H.E. (Eds). Scharfman, H. (2007). The CA3 "backprojection" to the dentate gyrus. *Progress in Brain Research. 163,* 627-637.

Schmidt-Hieber, C., Jonas, P., and Bischofberger, J. (2004). Enhanced synaptic plasticity in newly generated granule cells of the adult hippocampus. *Nature.429,* 184-187.

Scoville, W.B. and Milner, B. (1957). Loss of recent memory after bilateral hippocampal lesions. *Journal of Neurology, Neurosurgery, and Psychiatry. 20,* 11-21.

Schwartzkroin, P.A., Scharfman, H.E., and Sloviter, R.S. (1990). Similarities in circuitry between Ammon's horn and dentate gyrus: local interactions and parallel processing. *Progress in Brain Research. 83,* 269-286.

Sharon, T., Moscovitch, M., and Gilboa, A. (2011). Rapid neocortical acquisition of long-term arbitrary associations independent of the hippocampus. *Proceedings for the National Academy of Sciences. 108(3),* 1146-1151.

Shors, T.J., Miesegaes, G., Beylin, A., Zhao, M., Rydel, T., and Gould, E. (2001). Neurogenesis in the adult is involved in the formation of trace memories. *Nature. 410,* 372-376.

Shors, T.J., Townsend, D.A., Zhao, M., Kozoroviskiy, Y., and Gould, E. (2002). Neurogenesis may relate to some but not all types of hippocampal-dependent learning. *12,* 78-484.

Snyder, J.S., Choe, J.S., Clifford, M.A., Jeurling, S.I., Hurley, P., Brown, A., Kamhi, J.F., and Cameron, H.A. (2009). Adult-born hippocampal neurons are more numerous, faster maturing, and more involved in behavior in rats than mice. *The Journal of Neuroscience. 29(46),* 14484-14495.

Solomon, P.R., Vander Schaaf, E.R., Thompson, R.F., and Weisz, D.J. (1986). Hippocampus and trace conditioning of the rabbit's classically conditioned nictitating membrane response. *Behavioral Neuroscience. 100(5),* 729-744.

Spalding, K.L., Bergmann, O., Alkass, K., Bernard, S., Salehpour, M., Huttner, H.B., Bostrom, E., Westerlund, I., Vial, C., Buchholz, B.A., Possnert, G., Mash, D.C, Druid, H., and Fisen, J. (2013). Dynamics of hippocampal neurogenesis in adult humans. *Cell. 153,* 1219-1227.

Squire, L.R. and Wixted, J.T. (2011). The cognitive neuroscience of human memory since H.M. *Annual Review of Neuroscience. 34,* 259-288.

St-Laurent, M., Moscovitch, M., Jadd, R., and McAandrews, M.P. (2014). The perceptual richness of complex memory episodes is compromised by medial temporal lobe damage. *Hippocampus. 24,* 560-576.

Sutherland, R.J., O'Brien, J., and Lehmann, H. (2008). Absence of systems consolidation of fear memories after dorsal, ventral, or complete hippocampal damage. *Hippocampus. 18,* 710-718.

Sutherland, R.J., Sparks, F.T., and Lehmann, H. (2010). Hippocampus and retrograde amnesia in the rat model: a modest proposal for the situation of systems consolidation. *Neuropsychologia. 48,* 2357-2369.

Sutherland, R.J., Weisend, M.P., Mumby, D., Astur, R.S., Hanlon, F.M., Koerner, A., Thomas, M.J., Wu, Y., Moses, S.N., Cole, C., Hamilton, D.A., and Hoesing, J.M. (2001). Retrograde amnesia after hippocampal damage: recent vs. remote memories in two tasks. *Hippocampus. 11,* 27-42.

Takashima, A., Nieuwenhuis, I.L.C., Jensen, O., Talamini, L.M., Rijpkema, M., and Fernandez, G. (2009). Shift from hippocampal to neocortical centered retrieval network with consolidation. *The Journal of Neuroscience. 29(32),* 10087-10093.

Takehara, K., Kawahara, S., and Kirino, Y. (2003). Time-dependent reorganization of the brain components underlying memory retention in trace eyeblink conditioning. *The Journal of Neuroscience. 23(30),* 9897-9905.

Tanaka, K.Z., Pevzner, A., Hamidi, A.B., Nakazawa, Y., Graham, J., Wiltgen, B.J. (2014). Cortical representations are reinstated by the hippocampus during memory retrieval. *Neuron. 84,* 347-354.

Tashiro, A., Sandler, V.M., Toni, N, Zhao, C., and Gage, F. (2006). NMDA-receptor-mediated, cell-specific integration of new neurons in the adult dentate gyrus. *Nature. 442,* 929-933.

Tennie, C., Call, J., and Tomasello, M. (2009). Ratcheting up the ratchet: on the evolution of cumulative culture. *Philosophical Transactions of the Royal Society B: Biological Sciences. 364,* 2405-2415.

Teyler, T.J. and DiScenna, P. (1986). The hippocampal memory indexing theory. *Behavioral Neuroscience. 100(2),* 147-154.

Teyler, T.J. and Rudy, J.W. (2007). The hippocampal indexing theory and episodic memory: updating the index. *Hippocampus. 17,* 1158-1169.

Toni, N., Laplagne, D.A., Zhao, C., Lombardi, G., Ribak, C.E., Gage, F.H., and Schinder, A.F. (2008). Neurons born in the adult dentate gyrus form functional synapses with target cells. *Nature Neuroscience. 11(8),* 901-907.

Toni, N., Teng, E.M., Bushong, E.A., Aimone, J.B., Zhao, C., Consiglio, A., van Praag, H., Martone, M.E., Ellisman, M.H. and Gage, F.H. (2007). Synapse formation on neurons born in the adult hippocampus. *Nature Neuroscience. 10(6),* 727-734.

Treves, A. and Rolls, E.T. (1994). Computational analysis of the role of the hippocampus in memory. *Hippocampus. 4(3),* 374-391.

Tse, D., Langston, R.F., Kakeyama, M., Behus, I., Spooner, P.A., Wood, E.R., Witter, M.P., and Morris, R.G.M. (2007). Schemas and memory consolidation. *Science. 316,* 76-82.

Tse, D., Takeuchi, T., Kakeyama, M., Kajii, T., Okuno, H., Tohyama, C., Bito, H., and Morris, R.G.M. (2011). Schema-dependent gene activation and memory encoding in neocortex. *Science. 333,* 891-895.

van Groen, T., Miettinen, P., and Kadish, I. (2003). The entorhinal cortex of the mouse: organization of the projection to the hippocampal formation. *Hippocampus. 13,* 133-149.

Vivar, C., Potter, M.C., Choi, J., Lee, J., Stringer, T.P., Callawy, E.M., Gage, F.H., Suh, H., van Praag, H. (2012). Monosynaptic inputs to new neurons in the dentate gyrus. *Nature Communications. 3(1038)* DOI: 10.1038/ncomms2101.

Watrous, A.J., Tandon, N., Conner, C.R., Pieters, T., and Ekstrom, A.D. (2013). Frequency-specific network connectivity increases underlie accurate spatiotemporal memory retrieval. *Nature Neuroscience. 16(3),* 349-356.

Wiltgen, B.J., Sanders, M.J., Anagnostaras, S.G., Sage, J.R., and Fanselow, M.S. (2006). Context fear learning in the absence of the hippocampus. *Journal of Neuroscience, 26,* 5484-5491.

Wiltgen, B.F. and Silva, A.J. (2007). Memory for context becomes less specific with time. *Learning and Memory. 14,* 313-317.

Wiltgen, B.J. and Tanaka, K.Z. (2013). Systems consolidation and the content of memory. *Neurobiology of Learning and Memory. 106,* 365-371.

Wiltgen, B.J., Zhou, M., Cai, Y., Balaji, J., Karlsson, M.G., Parivash, S.N., Li, W., and Silva, A.J. (2010). The hippocampus plays a selective role in the retrieval of detailed contextual memories. *Current Biology. 20,* 1336-1344.

Winocur, G., Frankland, P.W., Sekeres, Melanie, S., Stuart, F., and Moscovitch, M. (2009). Changes in context-specificity during memory reconsolidation: selective effects of hippocampal lesions. *Learning and Memory. 16,* 722-729.

Winocur, G., Moscovitch, M., Fogel, S., Rosenbaum, R.S., and Sekeres, M. (2005). Preserved spatial memory after hippocampal lesions: effects of extensive experience in a complex environment. *Nature 8(3),* 273-275.

Winocur, G., Moscovitch, M., Rosenbaum, R.S., and Sekeres, M. (2010). An investigation of the effects of hippocampal lesions on rats on pre- and postoperatively acquired spatial memory in a complex environment. *Hippocampus. 20,* 1350-1365.

Winocur, G., Moscovitch, M., and Sekeres, M.J. (2013). Factors affecting graded and ungraded memory loss following hippocampal lesions. *Neurobiology of Learning and Memory. 106,* 351-364.

Winocur, G., Sekeres, M.J., Binns, M.A., Moscovitch, M. (2013). Hippocampal lesions produce both nongraded and temporally graded retrograde amnesia in the same rat. *Hippocampus. 23,* 330-341.

Winocur, G., Wojtowicz, J.M., Huang, J., and Tannock, I.F. (2014). Physical exercise prevents suppression of hippocampal neurogenesis and reduces cognitive impairment in chemotherapy-treated rats. *Psychopharmacology. 231,* 2311-2320.

Wouterlood, F.G., Saldana, E., and Witter, M.P. (1990). Projection from the nucleus reuniens thalami to the hippocampal region: light and electron microscopic tracing study in the rat with the anterograde tracer *Phaseolus vulgaris-leucoagglutinin. The Journal of Comparative Neurology. 296,* 179-203.

Wu, M.V. and Hen, R. (2014). Functional dissociation of adult-born neurons along the dorsoventral axis of the dentate gyrus. *Hippocampus. 24(7),* 751-761..

Yassa, M. and Stark, C.E. Pattern separation in the hippocampus. *Trends in Neuroscience. 34(10),* 515-525.

Yeckel, M.F. and Berger, T.W. (1990). Feedforward excitation of the hippocampus by afferents from the entorhinal cortex: redefinition of the role of the trisynaptic pathway. *Proceeding for the National Academy of Sciences. 87,* 5832-5836.

Yukie, M. (2000). Connections between the medial temporal cortex and the CA1 subfield of the hippocampal formation in the Japanese monkey (*Macaca fuscata*). *The Journal of Comparative Neurology. 423,* 282-298.

Zhao, C., Deng, W., and Gage, F.H. (2008). Mechanisms and functional implications of adult neurogenesis. *Cell. 132,* 645-660.

Zhao, C., Teng, E.M., Summers, R.G. Jr., Ming, G.L., and Gage, F.H. (2006). Distinct morphological stages of dentate granule neuron maturation in the adult mouse hippocampus. *Journal of Neuroscience. 4(26),* 3-11.

Zhong, Y.-M. and Rockland, K.S. (2004). Connections between the anterior inferotemporal cortex (area TE) and CA1 of the hippocampus in monkey. *Experimental Brain Research. 155,* 311-319.

Zhong, Y.-M., Yukie, M., and Rockland, K.S. (2005). Direct projections from CA1 to the superior temporal sulcus in the monkey, revealed by single axon analysis. *Brain Research. 1035,* 211-214.

Zhong, Y.-M., Yukie, M., and Rockland, K.S. (2006). Distinctive morphology of hippocampal CA1 terminations in orbital and medial frontal cortex in macaque monkeys. *Experimental Brain Research. 169,* 549-553.

Zola-Morgan, S., Squire, L.R., and Ramus, S.J. (1994). Severity of memory impairment in monkeys as a function of locus and extent of damage within the medial temporal lobe memory system. *Hippocampus. 4(4),* 483-495.